THE NEW
8
COUPÉ CONVERTIBLE GRAN COUPÉ

ALL BMW MODELS IN ONE APP.

DOWNLOAD THE **BMW Products** APP NOW AND DISCOVER THE PLEASURE OF DRIVING.

HIGHLIGHTS
- EXTERIOR AND INTERIOR DESIGN
- DRIVING DYNAMICS
- DRIVER ASSISTANCE SYSTEMS
- CONNECTIVITY
- EXTENDED EQUIPMENT

MODELS
- BASIC VERSION
- M850i xDRIVE
- M8
- M8 COMPETITION

EQUIPMENT
- WHEELS AND TYRES
- EXTERIOR COLOURS
- INTERIOR COLOURS
- GENUINE BMW ACCESSORIES

TECHNICAL VALUES AND SERVICES
- TECHNICAL VALUES
- BMW SERVICES

BMW M850i xDrive Convertible:
20" M light alloy wheels Double-spoke style 894 M Bicolour with mixed tyres and run-flat tyres, exterior paintwork in BMW Individual Frozen Pure Grey metallic, sport seats in BMW Individual full leather trim 'Merino' in Ivory White/Night Blue, fine-wood trim in ash burl Grey metallic high-gloss.

BMW M850i xDrive Coupé:
20" M light alloy wheels Y-spoke style 728 M Jet Black with performance tyres and mixed tyres, exterior paintwork in M Portimao Blue metallic, sport seats in BMW Individual full leather trim 'Merino' in Black | Black, Carbon Fibre M interior trim.

BMW M850i xDrive Gran Coupé:
20" M light alloy wheels Double-spoke style 895 M Bicolour with performance tyres and mixed tyres, exterior paintwork in BMW Individual Frozen Tanzanite Blue metallic, sport seats in BMW Individual full leather trim 'Merino' in Cognac I Black, Piano Black trim with Pearl Chrome finisher.

The models illustrated in this medium show the equipment and configuration options (standard and optional) for vehicles produced by BMW AG for the German market.

Alterations in standard and optional equipment and the configurations available for the different models, as described in this medium, may occur after 21 December 2021, the date when this medium went to press. Your local BMW Partner is available to provide further details. Subject to change in design and equipment.

**LET'S TALK ABOUT COURAGE,
AND WHY WE NEED IT MORE THAN EVER.**

COURAGE IS INDEPENDENT AND DISRUPTIVE. COURAGE QUESTIONS, SHATTERS AND AWAKENS. WE NEED BOLD, COURAGEOUS VOICES. ALL OF US. WE NEED FRESH THINKERS WITH OPTIMISM. WE BELIEVE IN THE FRONTRUNNERS. THE AVANTGARDE, THOSE WHO FIGHT STAGNATION AND BACKWARDNESS. COURAGE ONLY KNOWS MOVING FORWARD. DRIVING THE PIONEERS OF OUR CULTURE TO INSPIRE TOMORROW. TO CREATE A SUBLIME KIND OF NEW. REACHING A SUPERIOR LEVEL OF EXCELLENCE.

THIS IS WHERE A NEW KIND OF LUXURY IS BORN.

LUXURY REDEFINED.

POWER AND ELEGANCE, COMBINED IN ONE, CONFIDENT STATEMENT.

EXPRESSIVE LINES SIGNAL UNBRIDLED FORWARD THRUST.

SPORTY AESTHETE. EXPRESSIVE FROM ANY PERSPECTIVE.

CLARITY AND CLASS.

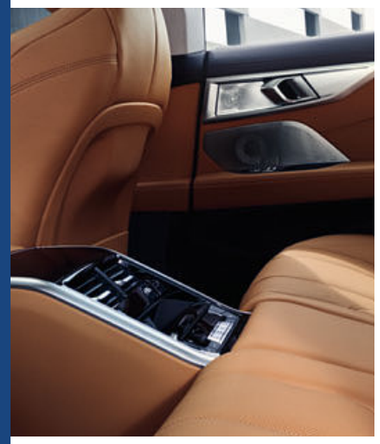

M BH 1132

FINDS THE IDEAL LINE
WITH EASE.

INNOVATION, INTELLIGENTLY INTEGRATED.

WITH THE FUTURE ON BOARD.

Driving information at a glance. Next level climate comfort. Intuitive control using voice, touch or gesture. And a stimulating sound system. In a BMW 8 Series, driving is an experience for the senses.

ONE STEP AHEAD
OF PROGRESS.

THE NEW 8 COUPÉ

VISIONARY DESIGN.

The BMW 8 Series Coupé embodies unbridled forward thrust. Expressive lines and the flat silhouette together with the powerful shoulder section reveal the power of its high-performance engine even when at a standstill.

THE NEW CONVERTIBLE 8

OPEN-TOP DRIVING PLEASURE.

The BMW 8 Series Convertible compact softtop can even be retracted in just 15 seconds while driving at speeds of up to 48 km/h. Neck warmers ensure a pleasant feel-good atmosphere at all times.

THE NEW 8 GRAN COUPÉ

SPACE FOR EXCLUSIVITY.

The standard panoramic glass sunroof provides a superb view and extends the generous feeling of space of the luxurious four-door model upwards. Premium materials perfect the exquisite interior.

MODEL VARIANTS AT A GLANCE.

BMW AUTOMOBILES

BASIC VERSION: M SPORT PACKAGE[1]

BMW 8 SERIES CONVERTIBLE.

BMW 8 SERIES COUPÉ.

BMW 8 SERIES GRAN COUPÉ.

BMW M AUTOMOBILES

BMW M850i xDRIVE

BMW M850i xDRIVE CONVERTIBLE.

BMW M850i xDRIVE COUPÉ.

BMW M850i xDRIVE GRAN COUPÉ.

[1] With the standard M Sport package, the BMW 8 Series models feature extensive equipment already in the basic version that highlights its dynamic character. An enhancement is available with the M Sport package Pro.

MODEL VARIANTS AT A GLANCE.

BMW M AUTOMOBILES

M8

BMW M8 CONVERTIBLE.*

BMW M8 COUPÉ.*

BMW M8 GRAN COUPÉ.*

M8 COMPETITION

BMW M8 COMPETITION CONVERTIBLE.

BMW M8 COMPETITION COUPÉ.

BMW M8 COMPETITION GRAN COUPÉ.

* The offer structure as well as market and production availability may vary. For detailed information about availabilities, duration and costs, contact your local BMW authorised workshop.

BMW 8 SERIES CONVERTIBLE M SPORT PACKAGE.

■ The Multifunction seats for driver and front passenger offer comprehensive adjustment possibilities and exceptional seating comfort and safety. This way, the seats can be optimally adapted to personal requirements by an electric backrest width adjustment, a variable lumbar support and a manual seat depth adjustment.

■ The standard M leather steering wheel including multifunction buttons, an M badge and an integrated driver's airbag is featured in three-spoke design. With a reinforced steering wheel rim in leather 'Walknappa' Black, with black stitching and contoured thumb rests, it conveys a sporty, direct steering sensation – not least thanks to integrated shift paddles.

■ 19" M light alloy wheels Double-spoke style 727 M Bicolour Orbit Grey with mixed tyres and run-flat tyres, gloss-lathed, wheel size front 8J x 19 with 245/40 R19 tyres, wheel size rear 9J x 19 with 275/35 R19 tyres.

M SPORT PACKAGE EXTERIOR EQUIPMENT:
- ■ M Aerodynamics package with front apron, side skirts and rear apron with diffuser insert in Dark Shadow metallic
- ■ 19" M light alloy wheels Double-spoke style 727 M Bicolour with mixed tyres and run-flat tyres; optional 20" M or BMW Individual light alloy wheels
- ■ M Sport braking system in Blue
- ■ M designation on the front side panels on the left and right in light Chrome
- ■ M High-gloss Shadowline exterior trim
- ■ Kidney slats in aluminium matt, kidney frame and Air Breather insert in Pearl Chrome with frame in Black high-gloss, dual tailpipe trims in light Chrome

M SPORT PACKAGE INTERIOR EQUIPMENT:
- ■ M door sill finishers, M driver footrest and M specific pedals
- ■ Multifunction seats for driver and front passenger in leather 'Merino' with extended contents Black/M piping Black; other upholsteries available
- ■ M leather steering wheel with multifunction buttons
- ■ M interior trim strips in Aluminium Trace, dark; other trims available
- ■ Car key with exclusive M designation
- ■ M specific floor mats in velour

■ Standard equipment □ Optional equipment

The availability of some equipment features, functions and digital services depends on engine versions or additional optional equipment. The offer structure as well as market and production availability may vary. For detailed information about availabilities, duration and costs, contact your local BMW authorised workshop.

BMW M850i xDRIVE CONVERTIBLE.
M PERFORMANCE PACKAGE.

□ The neck warmer ensures comfort when driving by pleasantly providing warmth for the head and shoulders. When the roof is open, the warming system integrated into the front seat headrests is automatically regulated based on the speed and outside temperature. Three different temperature levels can also be personally selected.

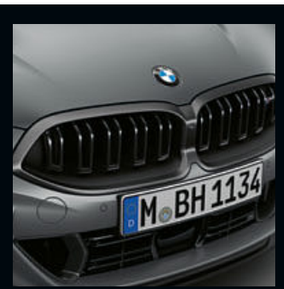

■ The M high-gloss Shadowline exterior trim with extended elements includes the kidney grille frame, the Air Breather inlays on the sides in Black matt and the tailpipe trims in Black Chrome. The kidney slats are in high-gloss Black.

■ The M Sport braking system has four-piston fixed calipers at the front and single-piston floating calipers at the rear in black with M inscription and features large brake discs to ensure outstanding braking performance.

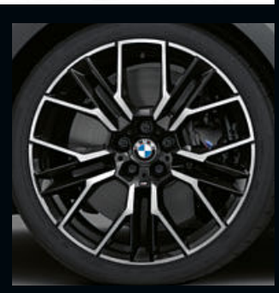

□ 20" M light alloy wheels Double-spoke style 894 M Bicolour Jet Black with mixed tyres and run-flat tyres, gloss-lathed, wheel size front 8J x 20 with 245/35 R20 tyres, wheel size rear 9J x 20 with 275/30 R20 tyres.

THE M PERFORMANCE PACKAGE EXTERIOR EQUIPMENT RANGE:
- ■ M lights Shadow Line
- ■ M high-gloss Shadowline exterior trip with extended elements
- ■ M Sport braking system with brake calipers in Black high-gloss and M designation

THE M PERFORMANCE PACKAGE INTERIOR EQUIPMENT RANGE:
- ■ M seat belts

■ Standard equipment □ Optional equipment

The availability of some equipment features, functions and digital services depends on engine versions or additional optional equipment. The offer structure as well as market and production availability may vary. For detailed information about availabilities, duration and costs, contact your local BMW authorised workshop.

BMW 8 SERIES COUPÉ M SPORT PACKAGE.

■ The Multifunction seats for driver and front passenger offer comprehensive adjustment possibilities and exceptional seating comfort and safety.

■ The standard M leather steering wheel including multifunction buttons, an M badge and an integrated driver's airbag is featured in three-spoke design. With a reinforced steering wheel rim in leather 'Walknappa' Black, with black stitching and contoured thumb rests, it conveys a sporty, direct steering sensation – not least thanks to integrated shift paddles.

■ The through-loading function creates flexibility in the interior. Both of the rear seat backrests can be individually folded 50:50, so bulky luggage such as golf bags or skis and snowboards can be fully loaded. The through-loading system is unlocked comfortably by hoist in the luggage compartment.

M SPORT PACKAGE EXTERIOR EQUIPMENT:
- M Aerodynamics package with front apron, side skirts and rear apron with diffuser insert in Dark Shadow metallic
- 19" M light alloy wheels Double-spoke style 727 M Bicolour with mixed tyres and run-flat tyres; optional 20" M or BMW Individual light alloy wheels
- M Sport braking system in Blue
- M designation on the front side panels on the left and right in light Chrome
- M High-gloss Shadowline exterior trim
- Kidney slats in aluminium matt, kidney frame and Air Breather insert in Pearl Chrome with frame in Black high-gloss, dual tailpipe trims in light Chrome

M SPORT PACKAGE INTERIOR EQUIPMENT:
- M door sill finishers, M driver footrest and M specific pedals
- Multifunction seats for driver and front passenger in leather 'Merino' with extended contents Black/M piping Black; other upholsteries available
- M leather steering wheel with multifunction buttons
- M interior trim strips in Aluminium Trace, dark; other trims available
- M anthracite headliner
- Car key with exclusive M designation
- M specific floor mats in velour

■ Standard equipment □ Optional equipment

The availability of some equipment features, functions and digital services depends on engine versions or additional optional equipment. The offer structure as well as market and production availability may vary. For detailed information about availabilities, duration and costs, contact your local BMW authorised workshop.

BMW M850i xDRIVE COUPÉ.
M PERFORMANCE PACKAGE.

■ The M high-gloss Shadowline exterior trim with extended elements includes the kidney grille frame, the Air Breather inlays on the sides in Black matt and the tailpipe trims in Black Chrome. The kidney slats are in high-gloss Black.

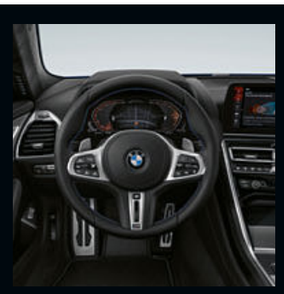

■ The standard M leather steering wheel including multifunction buttons, an M badge and an integrated driver's airbag is featured in three-spoke design. With a reinforced steering wheel rim in leather 'Walknappa' Black, with black stitching and contoured thumb rests, it conveys a sporty, direct steering sensation – not least thanks to integrated shift paddles.

□ 20" M light alloy wheels Y-spoke style 728 M Jet Black with performance tyres and mixed tyres, wheel size front 8J x 20 with 245/35 R20 tyres, wheel size rear 9J x 20 with 275/30 R20 tyres.

□ As part of the intelligent lightweight construction concept, the M Carbon roof helps to reduce the vehicle's weight. It consists of carbon-fibre reinforced plastic (CFRP) and is lighter than the standard roof. That way, the centre of gravity of the vehicle is shifted downwards and the driving dynamics are increased.

THE M PERFORMANCE PACKAGE EXTERIOR EQUIPMENT RANGE:
- M lights Shadow Line
- M high-gloss Shadowline exterior trip with extended elements
- M rear spoiler in Black Sapphire
- M Sport braking system with brake calipers in Black high-gloss and M designation

THE M PERFORMANCE PACKAGE INTERIOR EQUIPMENT RANGE:
- M seat belts

■ Standard equipment □ Optional equipment

The availability of some equipment features, functions and digital services depends on engine versions or additional optional equipment. The offer structure as well as market and production availability may vary. For detailed information about availabilities, duration and costs, contact your local BMW authorised workshop.

BMW 8 SERIES GRAN COUPÉ.

■ The Multifunction seats for driver and front passenger offer comprehensive adjustment possibilities and exceptional seating comfort and safety.

■ The standard M leather steering wheel including multifunction buttons, an M badge and an integrated driver's airbag is featured in three-spoke design. With a reinforced steering wheel rim in leather 'Walknappa' Black, with black stitching and contoured thumb rests, it conveys a sporty, direct steering sensation – not least thanks to integrated shift paddles.

■ The standard M High-gloss Shadowline exterior trim includes numerous equipment features in Black high-gloss. These include the Air Breather frame, the window frames as well as the mirror base. The Air Breather inlay is in Pearl Chrome.

■ 19" M light alloy wheels Double-spoke style 727 M Bicolour Orbit Grey with mixed tyres and run-flat tyres, gloss-lathed, wheel size front 8J x 19 with 245/40 R19 tyres, wheel size rear 9J x 19 with 275/35 R19 tyres.

M SPORT PACKAGE EXTERIOR EQUIPMENT:

- ■ M Aerodynamics package with front apron, side skirts and rear apron with diffuser insert in Dark Shadow metallic
- ■ 19" M light alloy wheels Double-spoke style 727 M Bicolour with mixed tyres and run-flat tyres; optional 20" M or BMW Individual light alloy wheels
- ■ M Sport braking system in Blue
- ■ M designation on the front side panels on the left and right in light Chrome
- ■ M High-gloss Shadowline exterior trim
- ■ Kidney slats in aluminium matt, kidney frame and Air Breather insert in Pearl Chrome with frame in Black high-gloss, dual tailpipe trims in light Chrome

M SPORT PACKAGE INTERIOR EQUIPMENT:

- ■ M door sill finishers, M driver footrest and M specific pedals
- ■ Multifunction seats for driver and front passenger in leather 'Merino' with extended contents Black/M piping Black; other upholsteries available
- ■ M leather steering wheel with multifunction buttons
- ■ M interior trim strips in Aluminium Trace, dark; other trims available
- ■ M anthracite headliner
- ■ Car key with exclusive M designation
- ■ M specific floor mats in velour

■ Standard equipment □ Optional equipment

The availability of some equipment features, functions and digital services depends on engine versions or additional optional equipment. The offer structure as well as market and production availability may vary. For detailed information about availabilities, duration and costs, contact your local BMW authorised workshop.

BMW M850i xDRIVE GRAN COUPÉ.

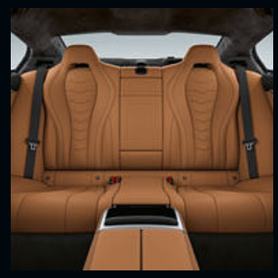

■ The outer seats of the rear bench seat have a sporty individual seat character with integrated headrests. An additional middle seat makes it possible to make shorter journeys with five people. The rear seat bench naturally has three-point seat belts on all three seats.

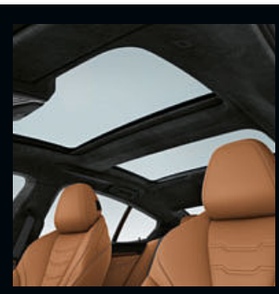

□ When opened, the electric panoramic glass sunroof with slide and lift functions provides ample fresh air, while it creates a bright, light-flooded atmosphere in the interior when closed. You open and close it at the touch of a button or with the vehicle key. It is equipped with a roller sunblind and a wind deflector. It also provides a continuous glass look from front to rear window.

■ The standard automatic air conditioning with 4-zone control allows an individual air conditioning function for you, the front passenger, as well as for the rear seat passengers. The temperature in the rear left and right can be adjusted separately using a dedicated operating element. A nanoparticle filter for fresh and recirculated air improves the air quality.

■ 20" M light alloy wheels Double-spoke style 895 M Bicolour Jet Black with mixed tyres and run-flat tyres, gloss-lathed, wheel size front 8J x 20 with 245/35 R20 tyres, wheel size rear 9J x 20 with 275/30 R20 tyres.

THE M PERFORMANCE PACKAGE EXTERIOR EQUIPMENT RANGE:

- ■ M lights Shadow Line
- ■ M high-gloss Shadowline exterior trip with extended elements
- ■ M Sport braking system with brake calipers in Black high-gloss and M designation

THE M PERFORMANCE PACKAGE INTERIOR EQUIPMENT RANGE:

- ■ M seat belts

■ Standard equipment □ Optional equipment

The availability of some equipment features, functions and digital services depends on engine versions or additional optional equipment. The offer structure as well as market and production availability may vary. For detailed information about availabilities, duration and costs, contact your local BMW authorised workshop.

BMW M8 CONVERTIBLE.

■ The multi-adjustable M Sport seats with bucket seat character and partly integrated headrest provide excellent lateral support for you and your front passenger.

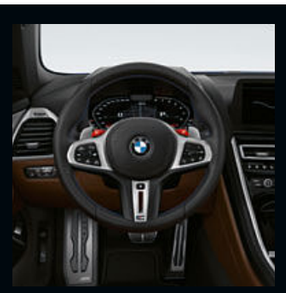

■ The M steering wheel with its contoured thumb rests and shift paddles conveys a sporty, direct steering sensation and maximum control. The integrated multifunction buttons enable the operation of various multimedia and driver assistance systems. The red M1/M2 buttons can be used to access two preset M Drive configurations.

□ 20" M light alloy wheels Star-spoke style 813 M Bicolour Black Grey with mixed tyres, gloss-milled, wheel size front 9.5J x 20 with 275/35 R20 tyres, wheel size rear 10.5J x 20 with 285/35 R20 tyres.

SELECTED EXTERIOR EQUIPMENT FEATURES:
- ■ M light alloy wheels
- ■ Adaptive LED Headlights incl. High-beam Assistant and LED rear lights
- ■ Automatic tailgate operation
- ■ Comfort Access

SELECTED INTERIOR EQUIPMENT FEATURES:
- ■ BMW Live Cockpit Professional with navigation and BMW Head-up display
- ■ M sport seats for driver and front passenger
- ■ Extended Merino leather
- ■ Seat adjustment, electrical with memory for driver and front passenger
- ■ Seat heating for driver and front passenger
- ■ M leather steering wheel with stitching in M colours
- ■ Harman Kardon surround sound system
- ■ 2-zone automatic air conditioning
- ■ Ambient interior lighting
- ■ Through-loading system

■ Standard equipment □ Optional equipment

The availability of some equipment features, functions and digital services depends on engine versions or additional optional equipment. The offer structure as well as market and production availability may vary. For detailed information about availabilities, duration and costs, contact your local BMW authorised workshop.

BMW M8 COMPETITION CONVERTIBLE.

□ The neck warmer ensures comfort when driving by pleasantly providing warmth for the head and shoulders. When the roof is open, the warming system integrated into the front seat headrests is automatically regulated based on the speed and outside temperature. Three different temperature levels can also be personally selected.

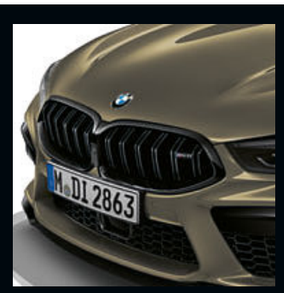

■ The M high-gloss Shadowline exterior trim with extended elements includes specific equipment features in Black and Black Chrome, that discreetly underline the vehicle's sporting appeal. The equipment includes the kidney grille frame, the exterior mirrors, the Air Breather inlays on the sides and the rear spoiler.

□ 20" M light alloy wheels Star-spoke style 813 M Bicolour Black Grey with mixed tyres, gloss-milled, wheel size front 9.5J x 20 with 275/35 R20 tyres, wheel size rear 10.5J x 20 with 285/35 R20 tyres.

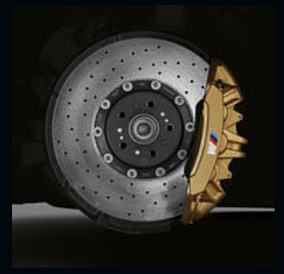

□ The M Carbon ceramic brake delivers braking power even more directly. The brake is non-corrosive and tolerates even more heat. It impresses with extremely minimal wear and contributes to a lower vehicle weight, which has a positive impact on agility, dynamics and acceleration. The special technical equipment is visible through calipers in the colour Gold matt with M logo on the outside.

BENEFITS OF THE COMPETITION AT A GLANCE:
- ■ State-of-the-art driving dynamics
- ■ Higher engine output increases performance
- ■ More direct steering and specially tuned running gear for maximum precision
- ■ M Sport exhaust system with black, chrome-plated twin tailpipes stands out thanks to a particularly sporty engine sound
- □ 20" M light alloy wheels Star-spoke style 813 M and exclusive design elements in Black, high-gloss sharpen the look

■ Standard equipment □ Optional equipment

The availability of some equipment features, functions and digital services depends on engine versions or additional optional equipment. The offer structure as well as market and production availability may vary. For detailed information about availabilities, duration and costs, contact your local BMW authorised workshop.

BMW M8 COUPÉ.

■ The M gear selector switch with Drivelogic switch and P button feels great in the driver's hand and is extremely easy to use.

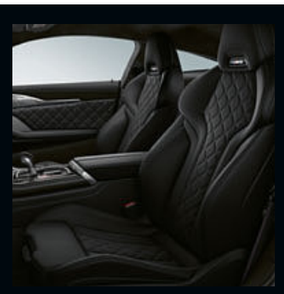

■ The multi-adjustable M Sport seats with bucket seat character and partly integrated headrest provide excellent lateral support for you and your front passenger. In addition, the backrest width can be individually adjusted. Their special design with illuminated M logo highlights the vehicle's athletic capabilities.

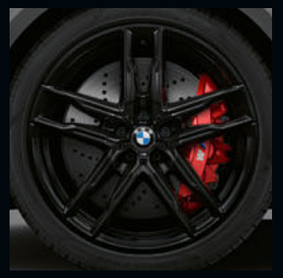

□ 20" M light alloy wheels Double-spoke style 810 M Jet Black with mixed tyres, wheel size front 9.5J x 20 with 275/35 R20 tyres, wheel size rear 10.5J x 20 with 285/35 R20 tyres.

SELECTED EXTERIOR EQUIPMENT FEATURES:
- ■ M Carbon roof
- ■ M light alloy wheels
- ■ Adaptive LED Headlights incl. High-beam Assistant and LED rear lights
- ■ Automatic tailgate operation
- ■ Comfort Access

SELECTED INTERIOR EQUIPMENT FEATURES:
- ■ BMW Live Cockpit Professional with navigation and BMW Head-up display
- ■ M sport seats for driver and front passenger
- ■ Extended 'Merino' leather
- ■ Seat adjustment, electrical with memory for driver and front passenger
- ■ Seat heating for driver and front passenger
- ■ M leather steering wheel with stitching in M colours
- ■ M Alcantara anthracite headliner
- ■ Harman Kardon surround sound system
- ■ 2-zone automatic air conditioning
- ■ Ambient interior lighting
- ■ Through-loading system

■ Standard equipment □ Optional equipment

The availability of some equipment features, functions and digital services depends on engine versions or additional optional equipment. The offer structure as well as market and production availability may vary. For detailed information about availabilities, duration and costs, contact your local BMW authorised workshop.

BMW M8 COMPETITION COUPÉ.

■ The M high-gloss Shadowline exterior trim with extended elements includes specific equipment features in Black and Black Chrome, that discreetly underline the vehicle's sporting appeal. The equipment includes the kidney grille frame, the exterior mirrors, the Air Breather inlays on the sides and the rear spoiler.

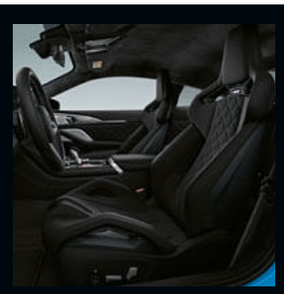

□ The M Carbon bucket seat with illuminated M8 logo combines the lightness and racing character of a bucket seat with the range of functions of an M sport seat. Its contouring offers perfect side support and excellent long distance comfort. It is compatible with multipoint harnesses and therefore fully suitable for racing.

□ 20" M light alloy wheels Double-spoke style 810 M Jet Black with mixed tyres, wheel size front 9.5J x 20 with 275/35 R20 tyres, wheel size rear 10.5J x 20 with 285/35 R20 tyres.

BENEFITS OF THE COMPETITION AT A GLANCE:
- ■ State-of-the-art driving dynamics
- ■ Higher engine output increases performance
- ■ More direct steering and specially tuned running gear for maximum precision
- ■ M Sport exhaust system with black, chrome-plated twin tailpipes stands out thanks to a particularly sporty engine sound
- □ 20" M light alloy wheels Star-spoke style 813 M and exclusive design elements in Black, high-gloss sharpen the look

■ Standard equipment □ Optional equipment

The availability of some equipment features, functions and digital services depends on engine versions or additional optional equipment. The offer structure as well as market and production availability may vary. For detailed information about availabilities, duration and costs, contact your local BMW authorised workshop.

BMW M8 GRAN COUPÉ.

■ The M steering wheel with its contoured thumb rests and shift paddles conveys a sporty, direct steering sensation and maximum control. The integrated multifunction buttons enable the operation of various multimedia and driver assistance systems. The red M1/M2 buttons can be used to access two preset M Drive configurations.

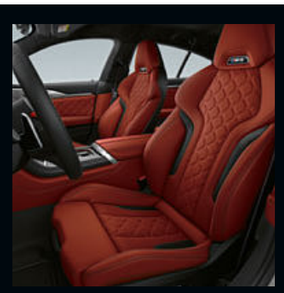

■ The multi-adjustable M Sport seats with bucket seat character and partly integrated headrest provide excellent lateral support for you and your front passenger. In addition, the backrest width can be individually adjusted. Their special design with illuminated M logo highlights the vehicle's athletic capabilities.

□ 20" M light alloy wheels Star-spoke style 811 M Bicolour Jet Black with mixed tyres, gloss-milled, wheel size front 9.5J x 20 with 275/35 R20 tyres, wheel size rear 10.5J x 20 with 285/35 R20 tyres.

SELECTED EXTERIOR EQUIPMENT FEATURES:
- ■ M Carbon roof
- ■ M light alloy wheels
- ■ Adaptive LED Headlights incl. High-beam Assistant and LED rear lights
- ■ Automatic tailgate operation
- ■ Comfort Access

SELECTED INTERIOR EQUIPMENT FEATURES:
- ■ BMW Live Cockpit Professional with navigation and BMW Head-up display
- ■ M sport seats for driver and front passenger
- ■ Extended Merino leather
- ■ Seat adjustment, electrical with memory for driver and front passenger
- ■ Seat heating for driver and front passenger
- ■ M leather steering wheel with stitching in M colours
- ■ M Alcantara anthracite headliner
- ■ Harman Kardon surround sound system
- ■ Air conditioning, automatic with 4-zone control
- ■ Ambient interior lighting
- ■ Through-loading system

■ Standard equipment □ Optional equipment

The availability of some equipment features, functions and digital services depends on engine versions or additional optional equipment. The offer structure as well as market and production availability may vary. For detailed information about availabilities, duration and costs, contact your local BMW authorised workshop.

BMW M8 COMPETITION GRAN COUPÉ.

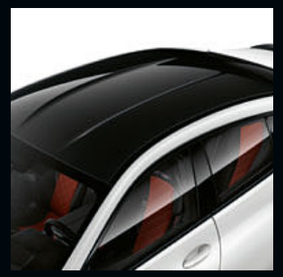

■ As part of the intelligent lightweight construction concept, the M Carbon roof helps to reduce the vehicle's weight. It consists of carbon-fibre reinforced plastic (CFRP) and is lighter than the standard roof. That way, the centre of gravity of the vehicle is shifted downwards and the driving dynamics are increased.

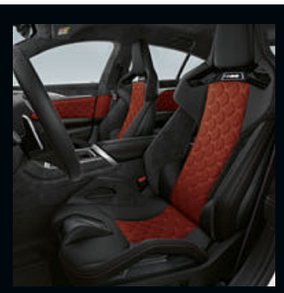

□ The M Carbon bucket seat with illuminated M8 logo combines the lightness and racing character of a bucket seat with the range of functions of an M sport seat. Its contouring offers perfect side support and excellent long distance comfort. It is compatible with multipoint harnesses and therefore fully suitable for racing.

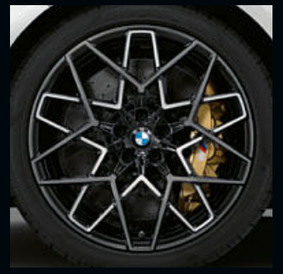

□ 20" M light alloy wheels Star-spoke style 813 M Bicolour Jet Black with mixed tyres, gloss-milled, wheel size front 9.5J x 20 with 275/35 R20 tyres, wheel size rear 10.5J x 20 with 285/35 R20 tyres.

□ 'Merino' leather/Alcantara combination HDJI Black/Sakhir Orange contrast

BENEFITS OF THE COMPETITION AT A GLANCE:
- ■ State-of-the-art driving dynamics
- ■ Higher engine output increases performance
- ■ More direct steering and specially tuned running gear for maximum precision
- ■ M Sport exhaust system with black, chrome-plated twin tailpipes stands out thanks to a particularly sporty engine sound
- □ 20" M light alloy wheels Star-spoke style 813 M and exclusive design elements in Black, high-gloss sharpen the look

■ Standard equipment □ Optional equipment

The availability of some equipment features, functions and digital services depends on engine versions or additional optional equipment. The offer structure as well as market and production availability may vary. For detailed information about availabilities, duration and costs, contact your local BMW authorised workshop.

EQUIPMENT

EQUIPMENT HIGHLIGHTS.

Discover select standard and optional equipment highlights.

■ The BMW kidney 'Iconic Glow' sets impressive visual highlights. With its innovative LED ambient lighting, it enables sensational light scenarios – for example while driving or when opening and closing your vehicle.

■ The front ornamental grille with kidney frame comes in Pearl Chrome, the vertical kidney slats in Aluminium matt. The kidney slats of the M850i xDrive are in Black high-gloss.

■ Standard equipment □ Optional equipment

The availability of some equipment features, functions and digital services depends on engine versions or additional optional equipment. The offer structure as well as market and production availability may vary. For detailed information about availabilities, duration and costs, contact your local BMW authorised workshop.

EQUIPMENT HIGHLIGHTS.

Discover select standard and optional equipment highlights.

□ BMW Live Cockpit Professional includes two high-quality displays consisting of a 12.3" Control Display and a fully digital 12.3" instrument display.

□ The Bowers & Wilkins Diamond surround sound system with three diamond tweeters and an output of 1,125 watts features outstanding studio-quality sound for every seat in the vehicle. Twelve carefully positioned speakers ensure a mesmerising sound experience. The speakers are illuminated, visually emphasising the system's outstanding sound quality.

□ The multi-adjustable M Sport seats with bucket seat character and partly integrated headrest provide excellent lateral support for you and your front passenger. In addition, the backrest width can be individually adjusted. Their special design with black M logo highlights the vehicle's athletic capabilities.

■ BMW Maps with Connected Navigation, Remote Services, Smartphone Integration incl. Apple CarPlay and Android Auto, In-Car Experiences and Concierge Service – the Connected Package Professional provides ample networking capability for your BMW. You benefit from increased comfort and improved operation.

■ Standard equipment □ Optional equipment

The availability of some equipment features, functions and digital services depends on engine versions or additional optional equipment. The offer structure as well as market and production availability may vary. For detailed information about availabilities, duration and costs, contact your local BMW authorised workshop.

EQUIPMENT HIGHLIGHTS.

Discover select standard and optional equipment highlights.

□ The safety package Driving Assistant[1] includes front collision warning with braking function, Speed Limit Assist including Speed Limit Display with no-overtaking indicator and pre-warning as well as rear crossing traffic warning. Lane Departure Warning and Lane Change Warning with active return, as well as rear collision warning complete the features.

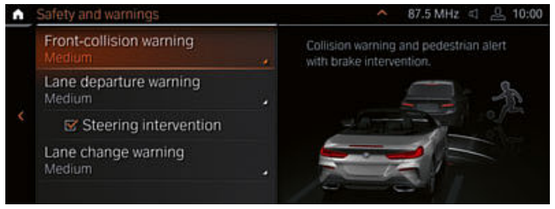

■ The Parking Assistant[2] makes parking the vehicle easier. The Reversing Assist Camera and Reversing Assistant support the driver when reversing. Active Park Distance Control offers increased protection against damage caused by parking. Parking Assistant parks the vehicle automatically, parallel or perpendicular to the street, and leaves parallel parking spaces.

□ Driving Assistant Professional[2] offers optimum comfort and safety during critical or monotonous traffic situations. Apart from the contents of the Driving Assistant, it also includes Steering and Lane Control Assistant with extended functions, Emergency Stop Assistant and Lane Keeping Assistant with active side collision protection.

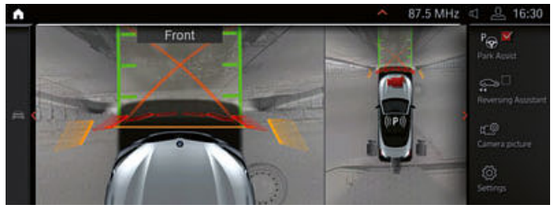

□ The Parking Assistant Plus[2] makes parking and manoeuvring the vehicle easier. It features among others the Surround View system including Top View, Panorama View, Remote 3D View, as well as a lateral parking aid, the emergency braking function Active Park Distance Control, BMW Drive Recorder, Parking Assistant with longitudinal and lateral guidance and Reversing Assistant.

■ The innovative operating concept of the BMW Operating System 7 enables even easier operation of vehicle functions via e.g. speech, touchscreen and BMW Controller – very intuitively. For this purpose, the functionality of the BMW Controller has been upgraded. So now the apps menu can be selected directly.

■ Wouldn't it be incredible if your BMW was also your personal vehicle expert? Communicate with your vehicle using the BMW Intelligent Personal Assistant. Say natural commands to operate numerous vehicle functions. It can also explain topics about your vehicle and helps you to get to know your BMW even better.

[1] Function may be restricted in darkness, fog or bright glare.

[2] The driver is responsible for constantly monitoring the automated parking manoeuvre in accordance with local road traffic regulations.

■ Standard equipment □ Optional equipment

The availability of some equipment features, functions and digital services depends on engine versions or additional optional equipment. The offer structure as well as market and production availability may vary. For detailed information about availabilities, duration and costs, contact your local BMW authorised workshop.

EQUIPMENT HIGHLIGHTS.

Discover select standard and optional equipment highlights.

■ The Exterior trim, Chromeline features kidney grille frame and slats, Air Breather inlay, window trim incl. frame, mirror base and the trims of the exhaust system in high-gloss Chrome. This emphasises the exterior's highly sophisticated appearance.[1]

□ The Sun protection glazing for the rear window and tinted rear side windows prevent the interior from heating up when exposed to direct sunlight. The darker glazing behind the B-pillars absorbs more sunlight. The tinted glazing does not hinder outward visibility, but offers more privacy in the rear.

□ As part of the intelligent lightweight construction concept, the M Carbon roof[2] helps to reduce the vehicle's weight. It consists of carbon-fibre reinforced plastic (CFRP) and is lighter than the standard roof. That way, the centre of gravity of the vehicle is shifted downwards and the driving dynamics are increased.

□ When opened, the electric panoramic glass sunroof with slide and lift functions provides ample fresh air, while it creates a bright, light-flooded atmosphere in the interior when closed. You open and close it at the touch of a button or with the vehicle key. It is equipped with a roller sunblind and a wind deflector. It also provides a continuous glass look from front to rear window.

[1] Not available in conjunction with BMW Individual high-gloss Shadowline exterior trim with extended features. The M850i xDrive features M mirror caps and kidney slats in Black high-gloss.

[2] Standard equipment for M8 Coupé and M8 Gran Coupé. Not available for M8 Convertible.

■ Standard equipment □ Optional equipment

The availability of some equipment features, functions and digital services depends on engine versions or additional optional equipment. The offer structure as well as market and production availability may vary. For detailed information about availabilities, duration and costs, contact your local BMW authorised workshop.

EQUIPMENT HIGHLIGHTS.

Discover select standard and optional equipment highlights.

■ Through numerous LED lights, the Ambient light produces a pleasant lighting mood in the interior and a special sense of space in the dark. Colours, brightness and colour scenarios can be adjusted individually. The equipment includes contour and map pocket lighting as well as light guides in the centre console.

□ The exclusive 'CraftedClarity' glass application comprises elaborately hand-made design elements made of crystal glass in smoky quartz look that visibly and noticeably enhance the interior. The details of the BMW Controller and the Start/Stop button are made of fine glass. The gear selector also has an extravagant crystal that is crowned by a finely worked, illuminated "8". The interior of the vehicle is perfected in this very special way and at the same time underlines the high standards of its driver.

□ The M Sport package Pro adds the finishing touches when it comes to sportiness, with design features in Black such as the M Sport braking system, 1" larger M light alloy wheels and more.

■ You and your passengers are welcomed by M entry sills[1] with the illuminated "M850i" designation – as soon as you get in.

[1] Standard for M850i xDrive.

■ Standard equipment □ Optional equipment

The availability of some equipment features, functions and digital services depends on engine versions or additional optional equipment. The offer structure as well as market and production availability may vary. For detailed information about availabilities, duration and costs, contact your local BMW authorised workshop.

■ The through-loading function creates flexibility in the interior. Both of the rear seat backrests can be individually folded 50:50, so bulky luggage such as golf bags or skis and snowboards can be fully loaded. The through-loading system is unlocked comfortably by hoist in the luggage compartment.

■ Storage options are provided by, amongst others, a glove compartment, front door pockets, a storage tray in the centre console as well as a storage compartment in the front armrest.

■ The adaptive LED headlights include low-beam and no-dazzle high-beam headlights (BMW Selective Beam) and turn indicators with full LED technology. The equipment also features cornering lights, daytime running lights and Adaptive headlights with variable light control for excellent illumination of the road ahead and better visibility in the dark.

□ In laser high-beam mode, BMW Laserlight illuminates a range of up to 600 m, nearly twice as far as that of conventional headlights. Better visibility in the dark significantly increases safety. Blue accents and the "BMW Laser" lettering in the headlight also underline the technological standards and the sportiness of the vehicle.

■ Standard equipment □ Optional equipment

The availability of some equipment features, functions and digital services depends on engine versions or additional optional equipment. The offer structure as well as market and production availability may vary. For detailed information about availabilities, duration and costs, contact your local BMW authorised workshop.

EQUIPMENT HIGHLIGHTS.
PERFORMANCE.

□ The M high-gloss Shadowline exterior trim with extended elements[1] consists of numerous body elements in Black matt, Black Chrome and Black high-gloss.

■ The standard M anthracite headliner together with body pillars, sun visors and grab handles also lined in anthracite ensure a sporty ambience in the interior.

□ The M seat belts with belt tensioner and belt force limiter boast an exquisite woven highlight in the classic M colours and emphasise the extremely high-quality and sporty ambience in the interior.

■ The M rear spoiler[2] emphasises the vehicle's athletic silhouette and reduces unwanted aerodynamic uplift. By producing downforce on the rear axle, it provides the vehicle with greater driving stability.

□ The multi-adjustable M Sport seats with bucket seat character and partly integrated headrest provide excellent lateral support for you and your front passenger. In addition, the backrest width can be individually adjusted. Their special design with black M logo highlights the vehicle's athletic capabilities.

[1] Only available in conjunction with M Sport package Pro, M Performance package or M Competition package.
[2] Only available for M850i x Drive and M8 models.

■ Standard equipment □ Optional equipment

The availability of some equipment features, functions and digital services depends on engine versions or additional optional equipment. The offer structure as well as market and production availability may vary. For detailed information about availabilities, duration and costs, contact your local BMW authorised workshop.

EQUIPMENT HIGHLIGHTS.
PERFORMANCE.

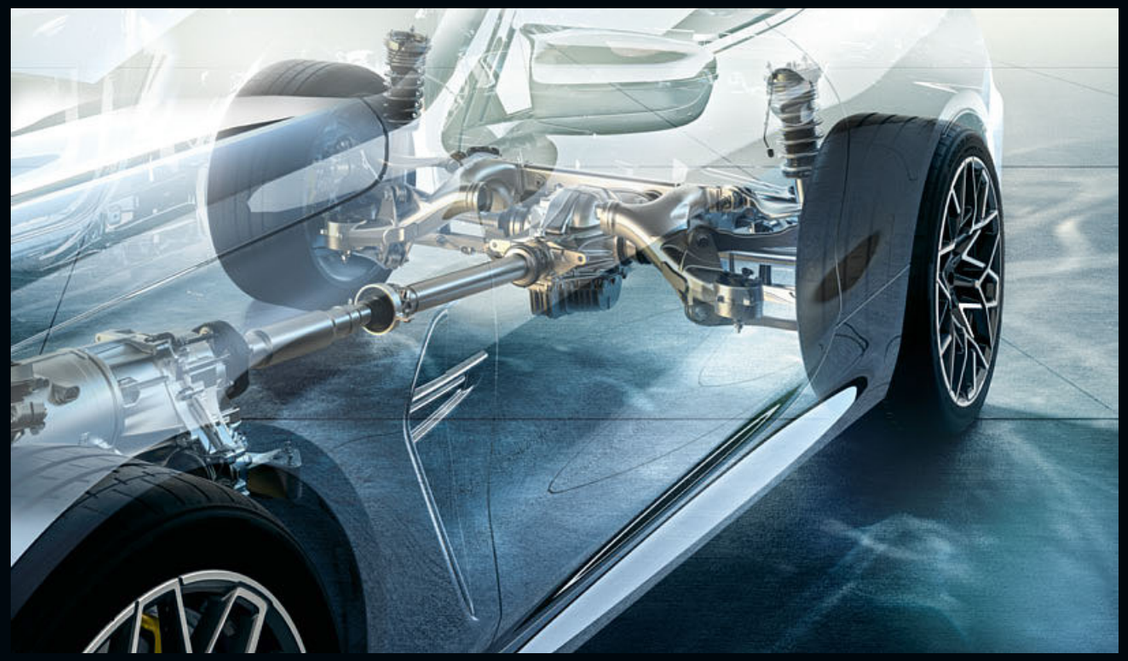

□ The Adaptive M suspension Professional[1] guarantees optimum driving stability and dynamics via the active roll stabilisation.

■ Large brake discs are the hallmark of the high-performance M Sport braking system, along with its exclusive black high-gloss brake calipers with the M designation.

■ The 8-speed Steptronic Sport transmission offers incredibly sporty gear changes. Whether automatic or manual using gearshift paddles or selector lever.

[1] Only available in conjunction with M850i xDrive in the Convertible and Coupé. For the Gran Coupé, available with all motorisations.

■ Standard equipment □ Optional equipment

The availability of some equipment features, functions and digital services depends on engine versions or additional optional equipment. The offer structure as well as market and production availability may vary. For detailed information about availabilities, duration and costs, contact your local BMW authorised workshop.

WHEELS AND TYRES.

■ 20" M light alloy wheels Double-spoke style 895 M Bicolour Jet Black with performance tyres and mixed tyres, gloss-lathed, wheel size front 8J x 20 with 245/35 R20 tyres, wheel size rear 9J x 20 with 275/30 R20 tyres.[1]

□ 20" M light alloy wheels Y-spoke style 728 M Jet Black with performance tyres and mixed tyres, wheel size front 8J x 20 with 245/35 R20 tyres, wheel size rear 9J x 20 with 275/30 R20 tyres.

□ 20" M light alloy wheels Y-spoke style 728 M Bicolour Jet Black with performance tyres and mixed tyres, gloss-lathed, wheel size front 8J x 20 with 245/35 R20 tyres, wheel size rear 9J x 20 with 275/30 R20 tyres.

□ 20" BMW Individual light alloy wheels V-spoke style 730 I Jet Black with mixed tyres and run-flat tyres, gloss-lathed, wheel size front 8J x 20 with 245/35 R20 tyres, wheel size rear 9J x 20 with 275/30 R20 tyres.

□ 20" M light alloy wheels Double-spoke style 894 M Bicolour Jet Black with mixed tyres and run-flat tyres, gloss-lathed, wheel size front 8J x 20 with 245/35 R20 tyres, wheel size rear 9J x 20 with 275/30 R20 tyres.

■ 19" M light alloy wheels Double-spoke style 727 M Bicolour Orbit Grey with mixed tyres and run-flat tyres, gloss-lathed, wheel size front 8J x 19 with 245/40 R19 tyres, wheel size rear 9J x 19 with 275/35 R19 tyres.

[1] Standard wheel for M850i xDrive.

■ Standard equipment □ Optional equipment

The availability of some equipment features, functions and digital services depends on engine versions or additional optional equipment. The offer structure as well as market and production availability may vary. For detailed information about availabilities, duration and costs, contact your local BMW authorised workshop.

EXTERIOR COLOURS.

SOLID

■ Non-metallic 300 Alpine White

METALLIC

□ Metallic A96 Mineral White

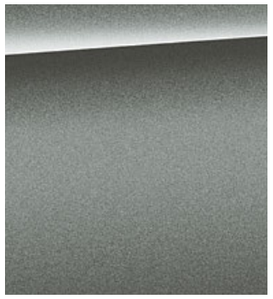

□ Metallic C4W Skyscraper Grey

□ Metallic C31 M Portimao Blue

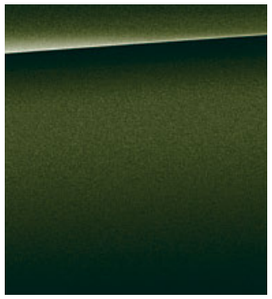

□ Metallic C4E Sanremo Green

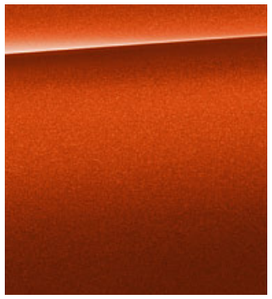

□ Metallic C1X Sunset Orange

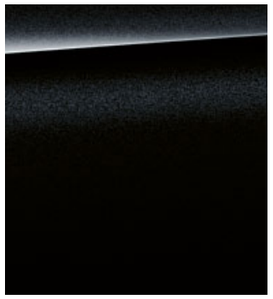

□ Metallic 475 Black Sapphire

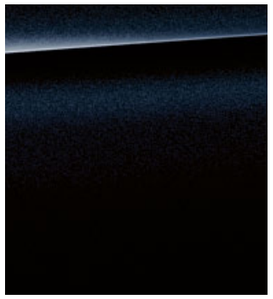

□ Metallic 416 M Carbon Black

BMW INDIVIDUAL

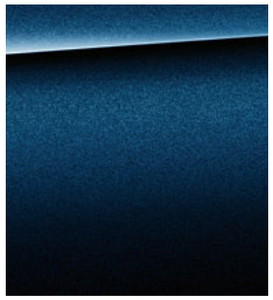

□ BMW Individual C3Z Tanzanite Blue metallic

□ BMW Individual X1G Frozen Tanzanite Blue metallic

□ BMW Individual C5A Frozen Pure Grey metallic

□ BMW Individual C36 Dravite Grey metallic

BMW INDIVIDUAL SPECIAL PAINTWORK

□ BMW Individual C57 Aventurine Red metallic

□ BMW Individual special paintwork Frozen Brilliant White metallic

□ BMW Individual special paintwork Brilliant White metallic

[Colour samples] These colour samples are intended as an initial guide to the colours and materials available for your BMW. In our experience, printed inks may not reproduce the exact original colour of paintwork, upholstery and interior trim in individual cases. Please discuss your colour choices with your BMW Retailer or in your branch. There you can also see original samples and be assisted with special requests.

■ Standard equipment □ Optional equipment

The availability of some equipment features, functions and digital services depends on engine versions or additional optional equipment. The offer structure as well as market and production availability may vary. For detailed information about availabilities, duration and costs, contact your local BMW authorised workshop.

INTERIOR COLOURS.

UPHOLSTERY COLOURS

■ Leather 'Merino' LKMI with extended contents black, M piping accent

□ BMW Individual extended leather trim 'Merino' VAHY Tartufo/Black

□ BMW Individual extended leather trim 'Merino' VASW Black

□ BMW Individual full leather trim 'Merino' ZBEX Ivory White

□ BMW Individual full leather trim 'Merino' ZBHZ Fiona Red/Black

BMW INDIVIDUAL

■ BMW Individual extended leather trim 'Merino' VAEX Ivory White

□ BMW Individual extended leather trim 'Merino' VAHZ Fiona Red/Black

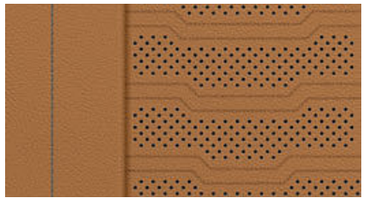

□ BMW Individual full leather trim 'Merino' ZBRI Cognac

□ BMW Individual full leather trim 'Merino' ZBHX Night Blue/Black

□ BMW Individual full leather trim 'Merino' ZBEI Ivory White/Night Blue[1]

□ BMW Individual extended leather trim 'Merino' VAHX Night Blue/Black

□ BMW Individual extended leather trim 'Merino' VARI Cognac

□ BMW Individual full leather trim 'Merino' ZBSW Black

□ BMW Individual full leather trim 'Merino' ZBHY Tartufo/Black

□ BMW Individual full leather trim 'Merino' ZBEJ Ivory White/Tartufo

[1] Only available in conjunction with BMW Individual leather steering wheel.

■ Standard equipment □ Optional equipment

The availability of some equipment features, functions and digital services depends on engine versions or additional optional equipment. The offer structure as well as market and production availability may vary. For detailed information about availabilities, duration and costs, contact your local BMW authorised workshop.

INTERIOR COLOURS.

INTERIOR TRIM FINISHERS

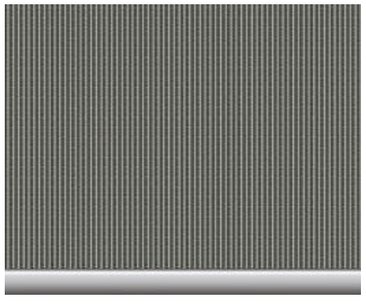

■ Aluminium Trace dark M interior trim strips

□ M interior trim finishers 'Carbon Fibre'

□ Fine-wood interior trim finisher strips Ash Grain Grey Metallic high-gloss

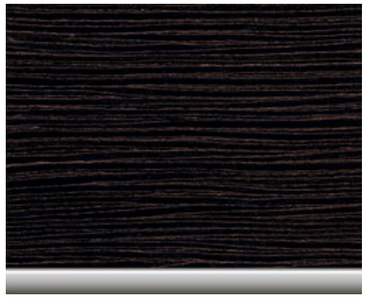

□ Fine-wood trim 'Fineline' Copper effect high-gloss interior trim finishers

BMW INDIVIDUAL

□ BMW Individual interior trim finishers piano finish Black

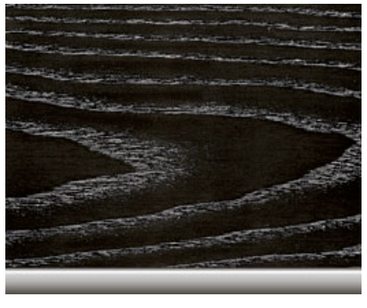

□ BMW Individual fine-wood interior trim finisher strips Ash Black Silver effect high-gloss

■ Standard equipment □ Optional equipment

The availability of some equipment features, functions and digital services depends on engine versions or additional optional equipment. The offer structure as well as market and production availability may vary. For detailed information about availabilities, duration and costs, contact your local BMW authorised workshop.

M8 EXTERIOR COLOURS. BMW M VEHICLES.

EXTERIOR COLOURS

■ Non-metallic 300 Alpine White

□ Metallic C4G M Isle of Man Green

□ Metallic C1K M Marina Bay Blue

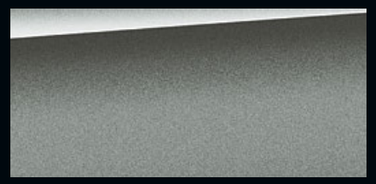

□ Metallic C4W Skyscraper Grey

□ Metallic C4P M Brooklyn Grey

□ Metallic 475 Black Sapphire

BMW INDIVIDUAL

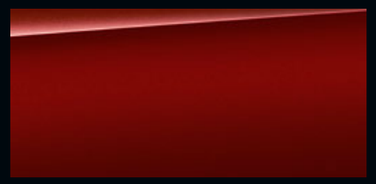

□ BMW Individual C57 Aventurine Red metallic

□ BMW Individual C3Z Tanzanite Blue metallic

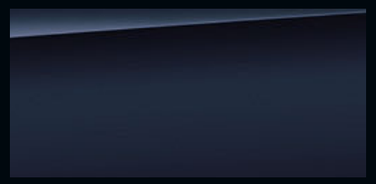

□ BMW Individual X1G Frozen Tanzanite Blue metallic

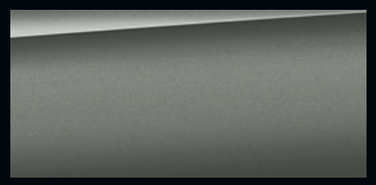

□ BMW Individual C5A Frozen Pure Grey metallic

□ BMW Individual C36 Dravite Grey metallic

WHEELS AND TYRES

□ 20" M light alloy wheels Double-spoke style 810 M Jet Black with mixed tyres, wheel size front 9.5J x 20 with 275/35 R20 tyres, wheel size rear 10.5J x 20 with 285/35 R20 tyres.

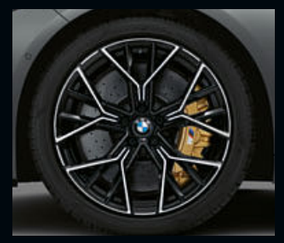

□ 20" M light alloy wheels Star-spoke style 811 M Bicolour Jet Black with mixed tyres, gloss-milled, wheel size front 9.5J x 20 with 275/35 R20 tyres, wheel size rear 10.5J x 20 with 285/35 R20 tyres.

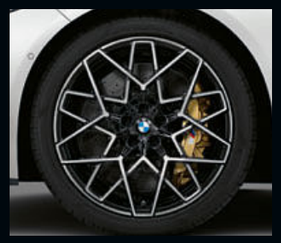

□ 20" M light alloy wheels Star-spoke style 813 M Bicolour Jet Black with mixed tyres, gloss-milled, wheel size front 9.5J x 20 with 275/35 R20 tyres, wheel size rear 10.5J x 20 with 285/35 R20 tyres.

□ 20" M light alloy wheels Star-spoke style 813 M Bicolour Black Grey with mixed tyres, gloss-milled, wheel size front 9.5J x 20 with 275/35 R20 tyres, wheel size rear 10.5J x 20 with 285/35 R20 tyres.

■ Standard equipment □ Optional equipment

The availability of some equipment features, functions and digital services depends on engine versions or additional optional equipment. The offer structure as well as market and production availability may vary. For detailed information about availabilities, duration and costs, contact your local BMW authorised workshop.

M8 INTERIOR COLOURS. BMW M VEHICLES.

UPHOLSTERY COLOURS

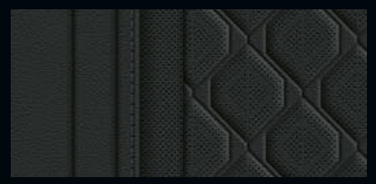

□ Leather 'Merino' with extended contents LKSW Black

■ Leather 'Merino' LKA9 with extended contents Silverstone Bicolour

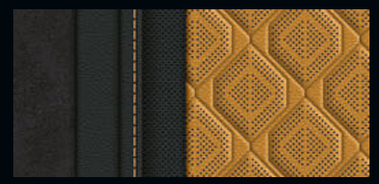

□ Full leather 'Merino'/Alcantara combination HEJA Black/contrast Midrand Beige

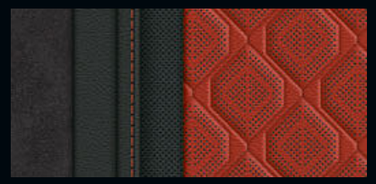

□ Merino leather/Alcantara combination HDJI Black/Sakhir Orange contrast

□ Full leather 'Merino' X3A9 Silverstone

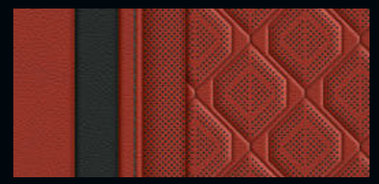

□ Full leather 'Merino' X3DA Sakhir Orange

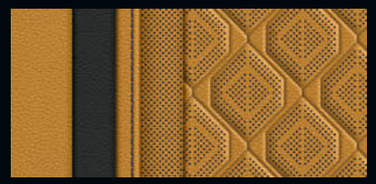

□ Full leather 'Merino' X3JQ Midrand Beige

□ Full leather 'Merino' X3JT Taruma Brown

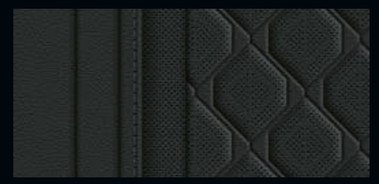

□ Full leather 'Merino' X3SW Black

BMW INDIVIDUAL

□ BMW Individual full leather trim 'Merino' ZBEI Ivory White/Night Blue[1]

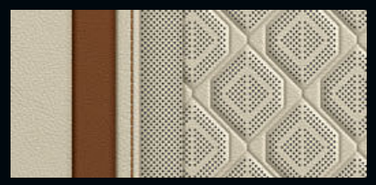

□ BMW Individual full leather trim 'Merino' ZBEJ Ivory White/Tartufo

INTERIOR TRIM FINISHERS

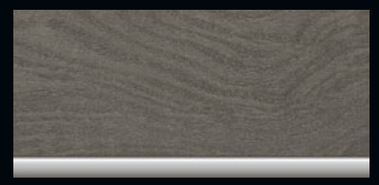

□ Fine-wood interior trim finisher strips Ash Grain Grey Metallic high-gloss

BMW INDIVIDUAL

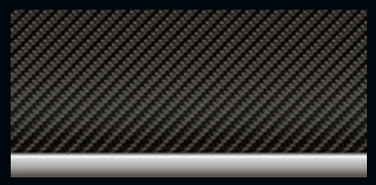

■ M interior trim finishers 'Carbon Fibre'

□ BMW Individual fine-wood interior trim finisher strips Ash Black Silver effect high-gloss

□ BMW Individual interior trim finishers piano finish Black

[1] Only available in conjunction with BMW Individual leather steering wheel.

Please note that even normal long- or short-term use can lead to unrecoverable upholstery damage. This can be caused in particular by non-colourfast clothing. Please note that the interior colour depends on the selected upholstery colour.

■ Standard equipment □ Optional equipment

The availability of some equipment features, functions and digital services depends on engine versions or additional optional equipment. The offer structure as well as market and production availability may vary. For detailed information about availabilities, duration and costs, contact your local BMW authorised workshop.

ORIGINAL BMW ACCESSORIES.

Intensive driving experiences, even further enhanced: Original BMW accessories are the best match for an original BMW. Whether you're looking for wheels and tyres, transport and luggage compartment solutions, interior equipment, communication, information and technology, charging accessories or M performance parts, with genuine BMW accessories you'll find exactly the individual solution that will allow you to discover driving pleasure as if for the first time.

WHEELS AND TYRES.

With original BMW complete wheels, you'll reach your destination safely, and emphasise the sporty appearance of your BMW from the very first glance. But what you don't immediately realise is that they are precisely tailored to your BMW, are subject to very stringent tests with intensive material and function checks, and have been developed in close collaboration with leading tyre manufacturers – individually tuned to the driving dynamics and design language of each individual BMW model.

TRANSPORT AND LUGGAGE COMPARTMENT SOLUTIONS.

Original BMW Accessories offer you a wide range of transport and luggage compartment solutions. In line with your personal preferences and interests, you can use them to create additional space whenever and wherever you need it. Whether carrier systems or accessories for the luggage compartment, you can always rely on original BMW accessories to be precisely tailored to your BMW, and easy to use.

INTERIOR ACCESSORIES.

A perfect fit: all original BMW accessory products for the interior help to design the interior of your BMW to fully meet your personal preferences. In addition to the excellent functionality of original BMW accessories, you are also always choosing attractive BMW design alongside extraordinary craftsmanship and material quality – combined with an ambience that will excite you every time you drive.

COMMUNICATION, INFORMATION AND TECHNOLOGY.

Cutting-edge functions and features for maximum freedom and flexibility: Original BMW accessories for communication, information and technology are always at your side. Whether you value optimum availability by phone or the best sound, the innovative original BMW accessories will have the right solution for you. You'll always enjoy a good connection and custom entertainment, wherever your journey takes you.

CHARGING ACCESSORIES.

Regardless of where and how you want to charge your new BMW, original BMW charging accessories offer you tailor-made products and services. You can charge your BMW at any domestic socket using the BMW Flexible Fast Charger or, for even more convenience, at a BMW Wallbox from original BMW accessories; what's more, there's also a widespread network of public charging points available for when you're on the road. Innovative Connected Charging services show charging stations in your BMW's information display, for example, or enable you to easily start pre-conditioning your vehicle just using your smartphone.

M PERFORMANCE PARTS.

With M performance parts, you can experience BMW's motorsport DNA with fascinating intensity, even off the racetrack. A wide range of technical and visual components makes outstanding technology a visible and tangible experience. Exclusive materials and first-rate quality guarantee flawless dynamism. Experience inspiring maximum product performance: individual, expressive and uncompromising.

The availability of the equipment shown and described may vary on a market-specific basis. Your local BMW partner will be happy to advise you on the full range of original BMW accessories.

Discover the whole range of original BMW accessories and the BMW M performance parts product portfolio.

TECHNICAL VALUES.

BMW 8 Series Convertible		840i	840i xDrive	M850i xDrive	840d xDrive[4]
Combustion engine					
Drive type		Petrol	Petrol	Petrol	Diesel
Cylinders/valves per cylinder		6/4	6/4	8/4	6/4
Capacity	cc	2998	2998	4395	2993
Output	kW (hp)/rpm	245 (333)/5500–6250	245 (333)/5500–6250	390 (530)/5500–6000	250 (340)/4400
Maximum torque	Nm/rpm	500/1700–4000	500/1700–4000	750/1800-4600	700/1750–2250
Transmission		Automatic	Automatic	Automatic	Automatic
Drive type		Rear-wheel drive	All-wheel drive	All-wheel drive	All-wheel drive
Electric motor					
Rated output	kW (hp)	–	–	–	8 (11)
Maximum torque	Nm	–	–	–	–[5]
Driving performance[2]					
0–100 km/h	s	5.5	5.2	4.1	5.1
Top speed	km/h	250[6]	250[6]	250[6]	250[6]
Consumption/CO_2 emissions[3]					
Combined fuel consumption (WLTP)	l/100 km	8.8–8.4	9.2–8.8	11.0–10.7	7.0–6.7
CO_2 emissions combined (WLTP)	g/km	201–191	209–200	249–243	183–175
Dimensions/weight					
Length/width/height	mm	4851/1902/1345	4851/1902/1345	4851/1902/1345	4851/1902/1345
Wheelbase	mm	2822	2822	2822	2822
Unladen weight[1]	kg	1915	1990	2125	2100
Luggage capacity	l	350–280	350–280	350–280	350–280
Fuel tank capacity	l	68	68	68	66

The figures for performance, fuel consumption and CO_2 emissions refer to vehicles with standard transmission.

[1] The EC unladen weight refers to a vehicle with standard equipment and does not include any optional equipment. The unladen weight includes a 90% full tank and a driver weight of 75 kg. Optional equipment may affect the weight of the vehicle, the payload and the top speed if the selected equipment has an impact on the vehicle's aerodynamics.

[2] Performance data of petrol engines applies to vehicles using RON 98 grade fuel. Fuel consumption data applies to vehicles using reference fuels in accordance with EU Regulation 715/2007. Unleaded RON 91 fuel and higher with a maximum ethanol content of 10% (E10) may also be used. BMW recommends RON 95 super unleaded petrol.

[3] Official data for fuel consumption, CO_2 emissions, power consumption and electric range was determined in accordance with the prescribed measuring procedure and corresponds to European Regulation (EC) 715/2007 in the applicable version. For ranges, data determined as per WLTP takes into account any optional equipment (available on the German market in this case). For vehicles that have been newly type approved since 1 January 2021, only the official data according to WLTP exists. For more information about NEDC and WLTP measuring procedures visit **www.bmw.com/wltp**

[4] This engine version is not available in all countries. For further information, please contact your local BMW authorised workshop.

[5] Provisional figures; any missing figures were unavailable at the time of publication.

[6] Electronically limited.

TECHNICAL VALUES.

BMW 8 Series Convertible

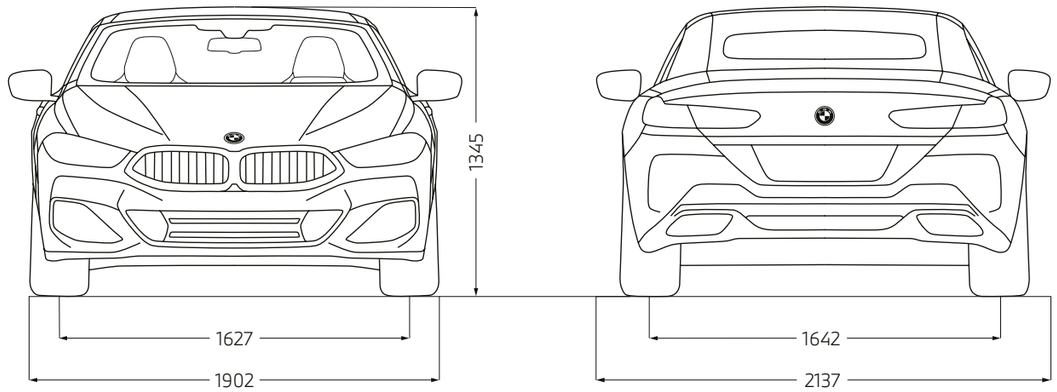

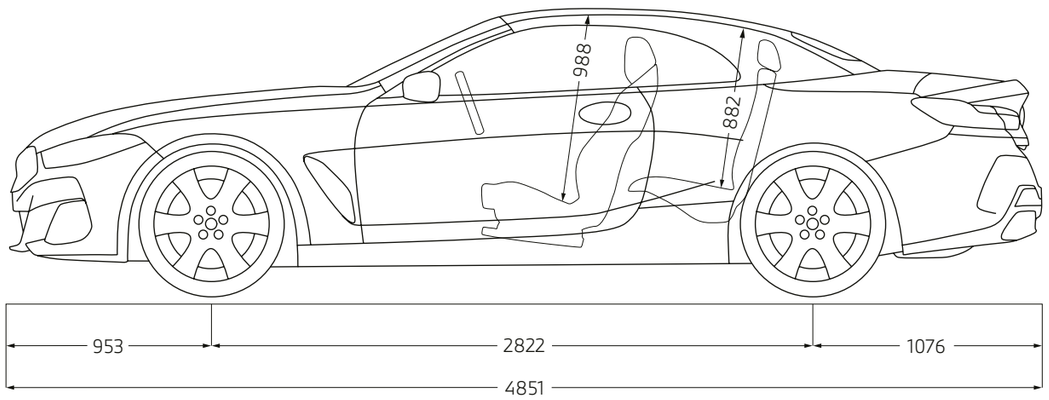

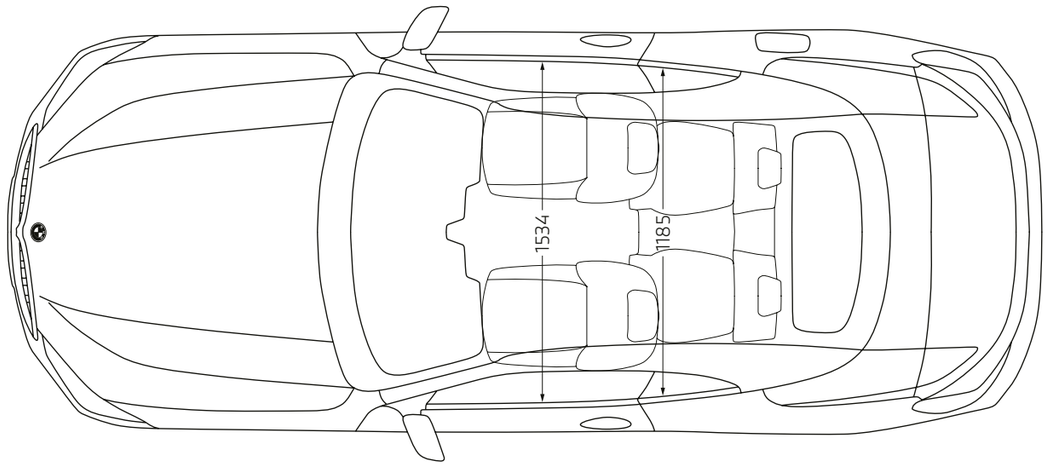

The dimensions in the technical drawings are in millimetres and may vary depending on the model and equipment.

TECHNICAL VALUES.

BMW 8 Series Coupé		840i	840i xDrive	M850i xDrive	840d xDrive[4]
Combustion engine					
Drive type		Petrol	Petrol	Petrol	Diesel
Cylinders/valves per cylinder		6/4	6/4	8/4	6/4
Capacity	cc	2998	2998	4395	2993
Output	kW (hp)/rpm	245 (333)/5500–6250	245 (333)/5500–6250	390 (530)/5500–6000	250 (340)/4400
Maximum torque	Nm/rpm	500/1700–4000	500/1700–4000	750/1800–4600	700/1750–2250
Transmission		Automatic	Automatic	Automatic	Automatic
Drive type		Rear-wheel drive	All-wheel drive	All-wheel drive	All-wheel drive
Electric motor					
Rated output	kW (hp)	–	–	–	8 (11)
Maximum torque	Nm	–	–	–	–[5]
Performance[2]					
0–100 km/h	s	5.2	4.9	3.9	4.8
Top speed	km/h	250[6]	250[6]	250[6]	250[6]
Consumption/CO_2 emissions[3]					
Combined fuel consumption	l/100 km	8.6–8.2	8.9–8.6	10.8–10.5	6.8–6.5
CO_2 emissions combined	g/km	196–186	204–195	245–239	179–170
Dimensions/weight					
Length/width/height	mm	4851/1902/1346	4851/1902/1346	4851/1902/1346	4851/1902/1346
Wheelbase	mm	2822	2822	2822	2822
Unladen weight[1]	kg	1805	1870	2005	1990
Luggage capacity	l	420	420	420	420
Fuel tank capacity	l	68	68	68	66

The figures for performance, fuel consumption and CO_2 emissions refer to vehicles with standard transmission.

[1] The EC unladen weight refers to a vehicle with standard equipment and does not include any optional equipment. The unladen weight includes a 90% full tank and a driver weight of 75 kg. Optional equipment may affect the weight of the vehicle, the payload and the top speed if the selected equipment has an impact on the vehicle's aerodynamics.

[2] Performance data of petrol engines applies to vehicles using RON 98 grade fuel. Fuel consumption data applies to vehicles using reference fuels in accordance with EU Regulation 715/2007. Unleaded RON 91 fuel and higher with a maximum ethanol content of 10% (E10) may also be used. BMW recommends RON 95 super unleaded petrol.

[3] Official data for fuel consumption, CO_2 emissions, power consumption and electric range was determined in accordance with the prescribed measuring procedure and corresponds to European Regulation (EC) 715/2007 in the applicable version. For ranges, data determined as per WLTP takes into account any optional equipment (available on the German market in this case). For vehicles that have been newly type approved since 1 January 2021, only the official data according to WLTP exists. For more information about NEDC and WLTP measuring procedures visit **www.bmw.com/wltp**

[4] This engine version is not available in all countries. For further information, please contact your local BMW authorised workshop.

[5] Provisional figures; any missing figures were unavailable at the time of publication.

[6] Electronically limited.

TECHNICAL VALUES.

BMW 8 Series Coupé

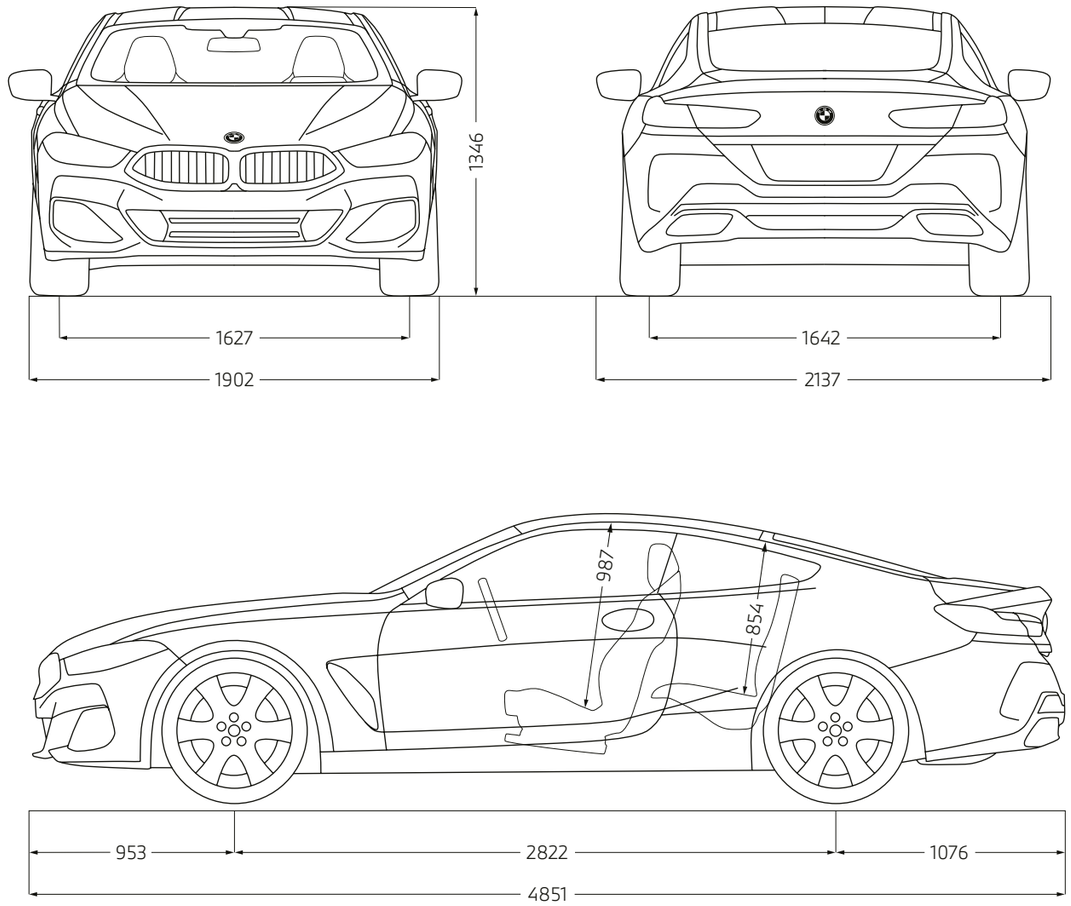

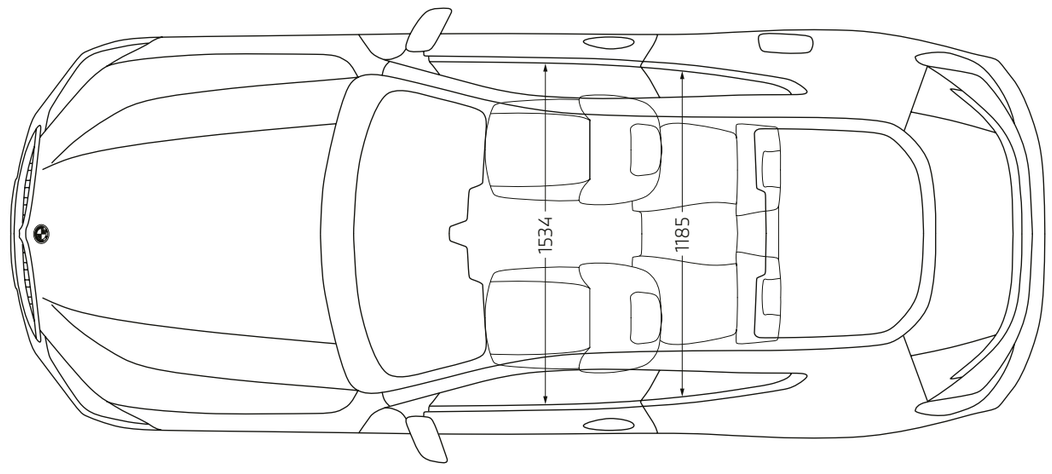

The dimensions in the technical drawings are in millimetres and may vary depending on the model and equipment.

TECHNICAL VALUES.

BMW 8 Series Gran Coupé		840i	840i xDrive	M850i xDrive	840d xDrive[4]
Combustion engine					
Drive type		Petrol	Petrol	Petrol	Diesel
Cylinders/valves per cylinder		6/4	6/4	8/4	6/4
Capacity	cc	2998	2998	4395	2993
Output	kW (hp)/rpm	245 (333)/5500–6250	245 (333)/5500–6250	390 (530)/5500–6000	250 (340)/4400
Maximum torque	Nm/rpm	500/1700–4000	500/1700–4000	750/1800–4600	700/1750–2250
Transmission		Automatic	Automatic	Automatic	Automatic
Drive type		Rear-wheel drive	All-wheel drive	All-wheel drive	All-wheel drive
Electric motor					
Rated output	kW (hp)	–	–	–	8 (11)
Maximum torque	Nm	–	–	–	–[5]
Performance[2]					
0–100 km/h	s	5.4	5.1	3.9	5.0
Top speed	km/h	250[6]	250[6]	250[6]	250[6]
Consumption/CO_2 emissions[3]					
Combined fuel consumption	l/100 km	8.9–8.4	9.3–8.7	11.0–10.7	7.1–6.7
CO_2 emissions, combined	g/km	203–191	211–199	251–243	186–174
Dimensions/weight					
Length/width/height	mm	5082/1932/1407	5082/1932/1407	5082/1932/1407	5082/1932/1407
Wheelbase	mm	3023	3023	3023	3023
Unladen weight[1]	kg	1890	1950	2085	2070
Luggage capacity	l	440	440	440	440
Fuel tank capacity	l	68	68	68	66

The figures for performance, fuel consumption and CO_2 emissions refer to vehicles with standard transmission.

[1] The EC unladen weight refers to a vehicle with standard equipment and does not include any optional equipment. The unladen weight includes a 90% full tank and a driver weight of 75 kg. Optional equipment may affect the weight of the vehicle, the payload and the top speed if the selected equipment has an impact on the vehicle's aerodynamics.

[2] Performance data of petrol engines applies to vehicles using RON 98 grade fuel. Fuel consumption data applies to vehicles using reference fuels in accordance with EU Regulation 715/2007. Unleaded RON 91 fuel and higher with a maximum ethanol content of 10% (E10) may also be used. BMW recommends RON 95 super unleaded petrol.

[3] Official data for fuel consumption, CO_2 emissions, power consumption and electric range was determined in accordance with the prescribed measuring procedure and corresponds to European Regulation (EC) 715/2007 in the applicable version. For ranges, data determined as per WLTP takes into account any optional equipment (available on the German market in this case). For vehicles that have been newly type approved since 1 January 2021, only the official data according to WLTP exists. For more information about NEDC and WLTP measuring procedures visit **www.bmw.com/wltp**

[4] This engine version is not available in all countries. For further information, please contact your local BMW authorised workshop.

[5] Provisional figures; any missing figures were unavailable at the time of publication.

[6] Electronically limited.

TECHNICAL VALUES.

BMW 8 Series Gran Coupé

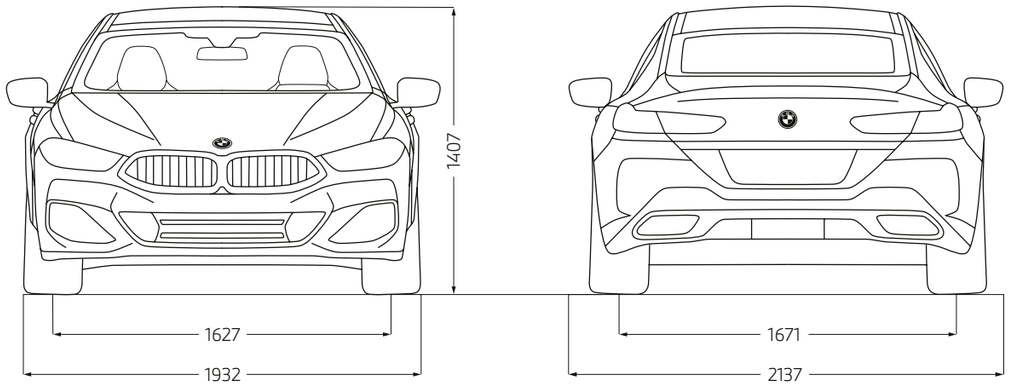

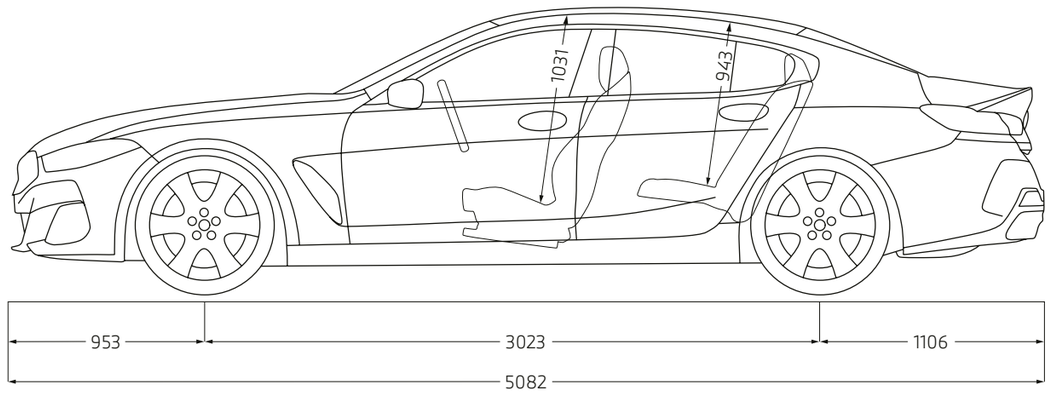

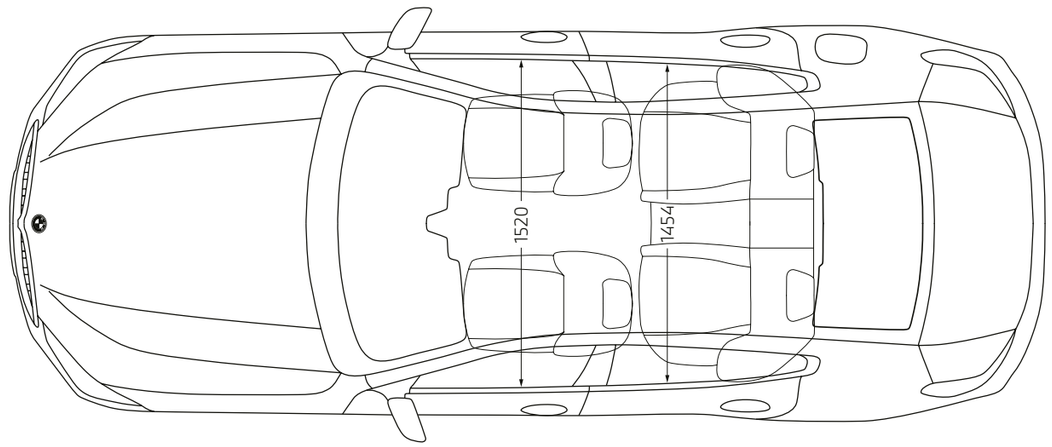

The dimensions in the technical drawings are in millimetres and may vary depending on the model and equipment.

TECHNICAL VALUES.

		M8 Convertible*	M8 Competition Convertible	M8 Coupé*	M8 Competition Coupé	M8 Gran Coupé*	M8 Competition Gran Coupé
Combustion engine							
Drive type		Petrol	Petrol	Petrol	Petrol	Petrol	Petrol
Cylinders/valves per cylinder		8/4	8/4	8/4	8/4	8/4	8/4
Capacity	cc	4395	4395	4395	4395	4395	4395
Output	kW (hp)/rpm	441 (600)/6000	460 (625)/6000	441 (600)/6000	460 (625)/6000	441 (600)/6000	460 (625)/6000
Maximum torque	Nm/rpm	750/1800–5600	750/1800–5860	750/1800–5600	750/1800–5860	750/1800–5600	750/1800–5860
Transmission		Automatic	Automatic	Automatic	Automatic	Automatic	Automatic
Drive type		All-wheel drive	All-wheel drive	All-wheel drive	All-wheel drive	All-wheel drive	All-wheel drive
Driving performance[2]							
0–100 km/h	s	3.4	3.3	3.3	3.2	3.3	3.2
Top speed	km/h	250[4]	250[4]	250[4]	250[4]	250[4]	250[4]
Consumption/CO_2 emissions[3]							
Fuel consumption, combined (WLTP)	l/100 km	11.6–11.2	11.6–11.2	11.4–11.0	11.4–11.0	11.6–11.2	11.6–11.2
CO_2 emissions, combined (WLTP)	g/km	264–255	264–255	260–251	260–251	265–256	265–256
Dimensions/weight							
Length/width/height	mm	4867/1907/1353	4867/1907/1353	4867/1907/1362	4867/1907/1362	5098/1943/1420	5098/1943/1420
Wheelbase	mm	2827	2827	2827	2827	3027	3027
Unladen weight[1]	kg	2100	2100	1975	1975	2070	2070
Luggage capacity	l	280–350	280–350	420	420	440	440
Fuel tank capacity	l	68	68	68	68	68	68

The figures for performance, fuel consumption and CO_2 emissions refer to vehicles with standard transmission.

[1] The EC unladen weight refers to a vehicle with standard equipment and does not include any optional equipment. The unladen weight includes a 90% full tank and a driver weight of 75 kg. Optional equipment may affect the weight of the vehicle, the payload and the top speed if the selected equipment has an impact on the vehicle's aerodynamics.

[2] Performance data of petrol engines applies to vehicles using RON 98 grade fuel. Fuel consumption data applies to vehicles using reference fuels in accordance with EU Regulation 715/2007. Unleaded RON 91 fuel and higher with a maximum ethanol content of 10% (E10) may also be used. BMW recommends RON 95 super unleaded petrol.

[3] Official data for fuel consumption, CO_2 emissions, power consumption and electric range was determined in accordance with the prescribed measuring procedure and corresponds to European Regulation (EC) 715/2007 in the applicable version. For ranges, data determined as per WLTP takes into account any optional equipment (available on the German market in this case). For vehicles that have been newly type approved since 1 January 2021, only the official data according to WLTP exists. For more information about NEDC and WLTP measuring procedures visit **www.bmw.com/wltp**

[4] Electronically limited.

*The offer structure as well as market and production availability may vary. For detailed information about availabilities, duration and costs, contact your local BMW authorised workshop.

TECHNICAL VALUES.

BMW 8 Series Convertible

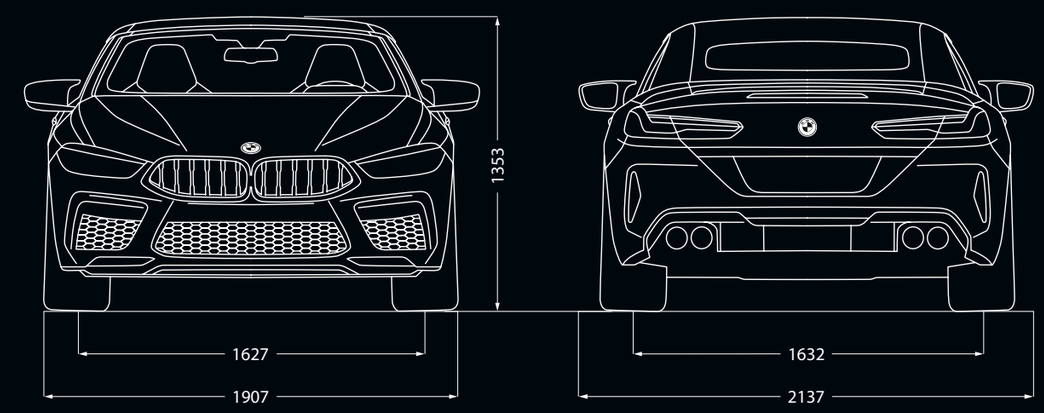

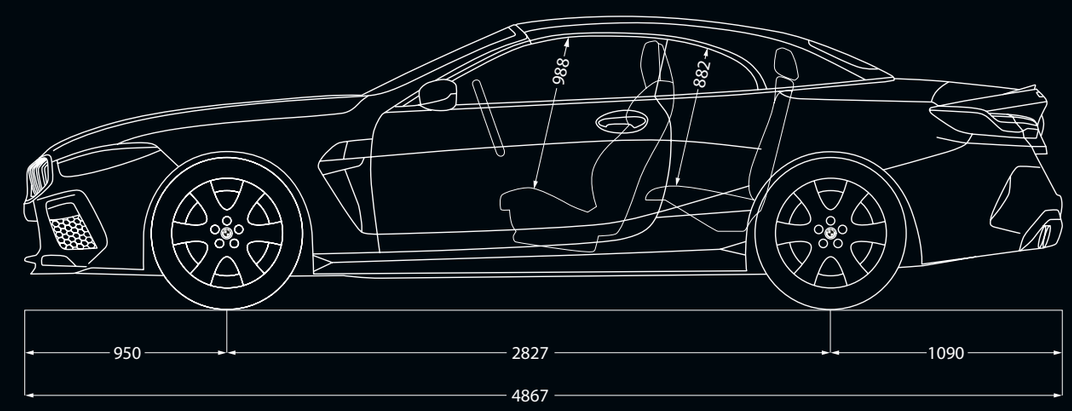

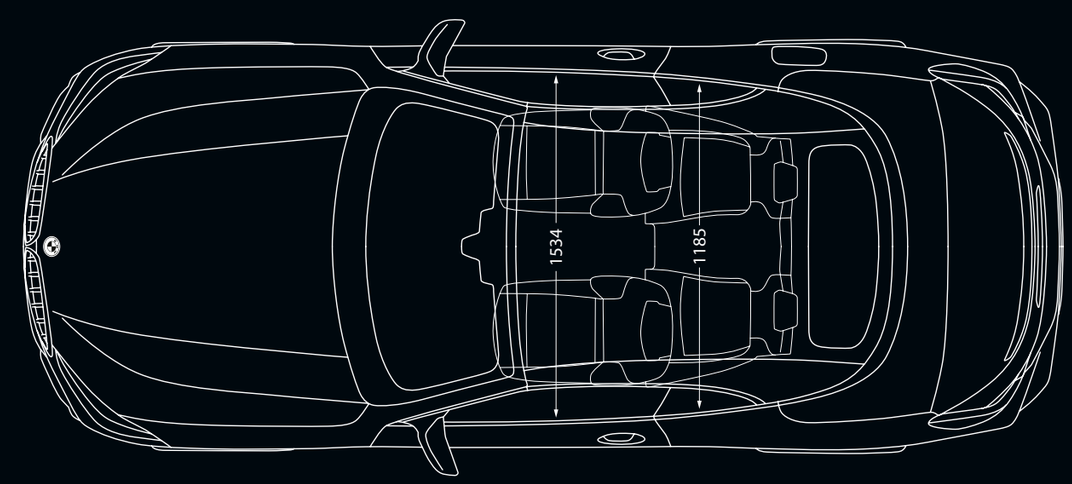

The dimensions in the technical drawings are in millimetres and may vary depending on the model and equipment.

TECHNICAL VALUES.

BMW 8 Series Coupé

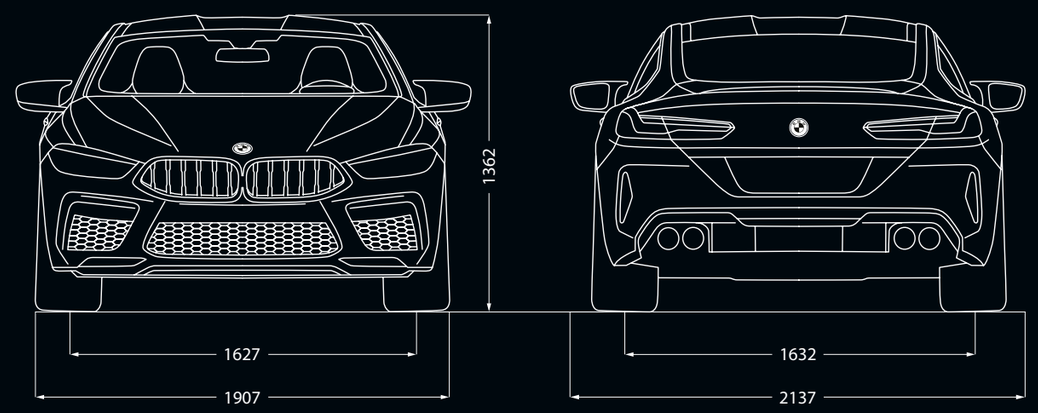

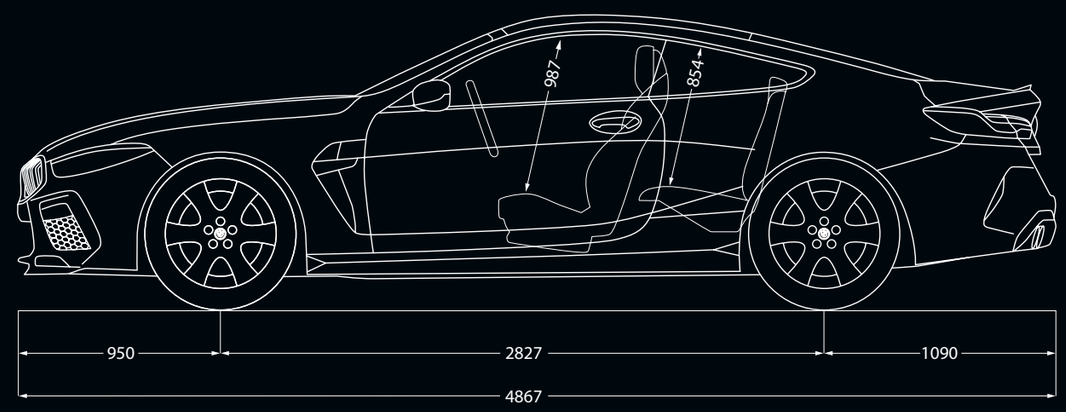

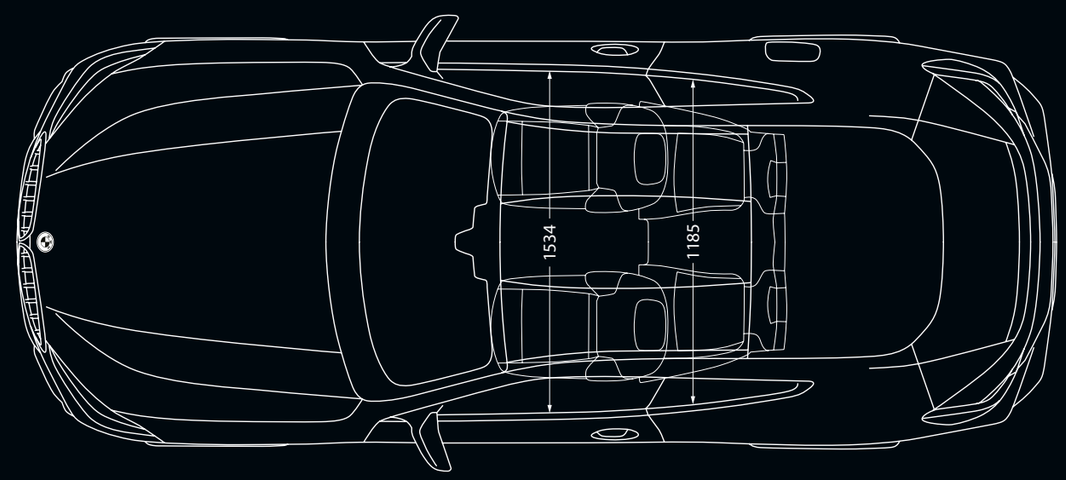

The dimensions in the technical drawings are in millimetres and may vary depending on the model and equipment.

TECHNICAL VALUES.

BMW 8 Series Gran Coupé

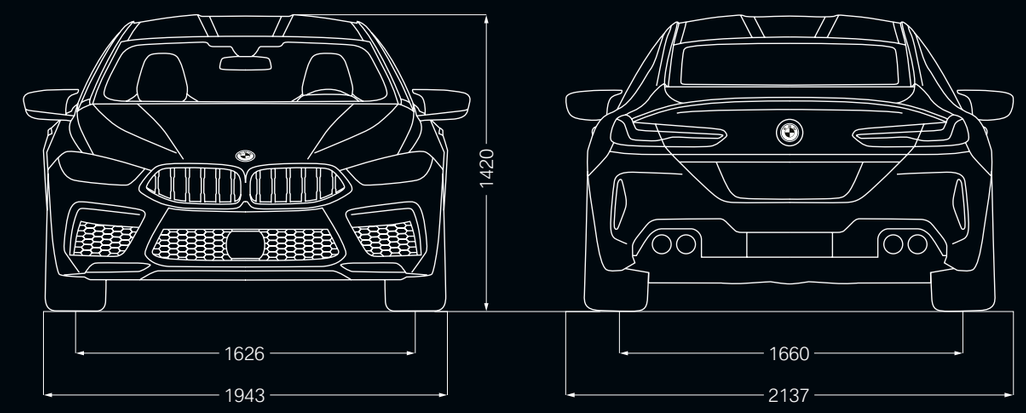

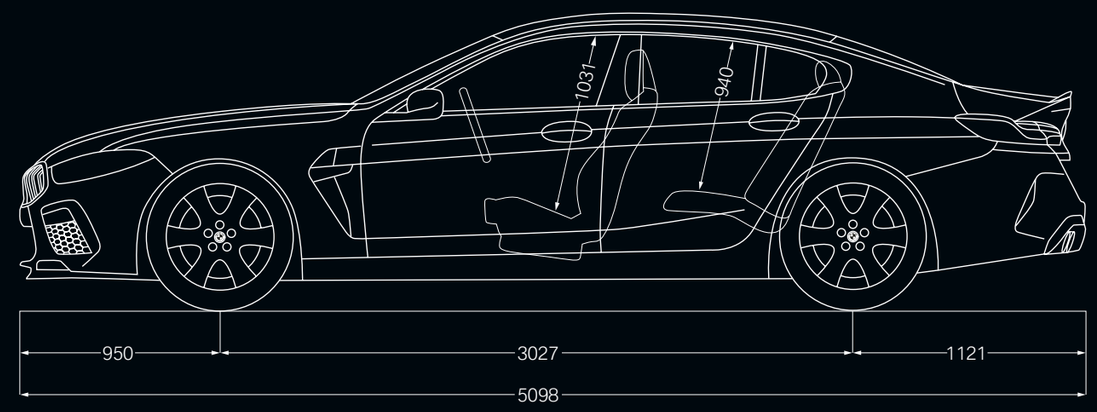

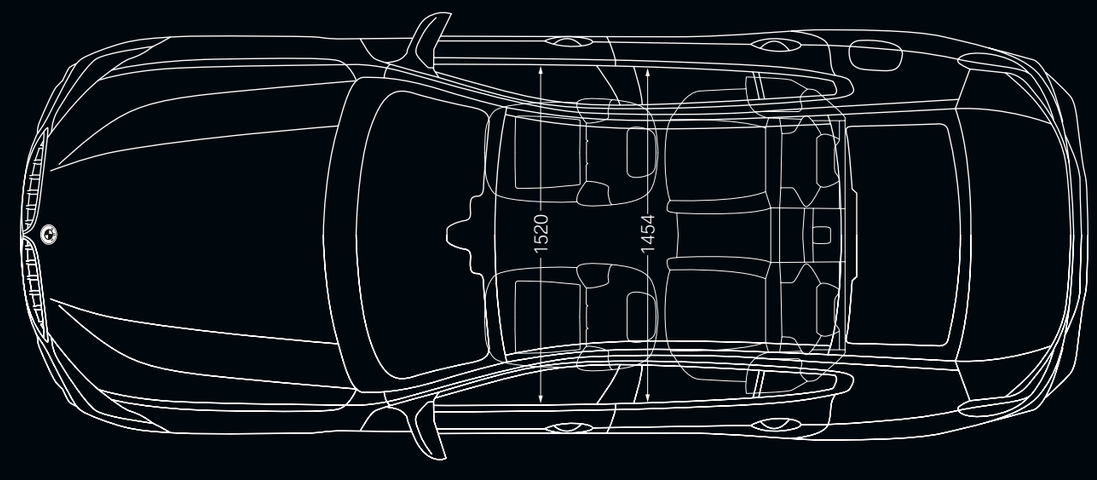

The dimensions in the technical drawings are in millimetres and may vary depending on the model and equipment.

BMW SERVICE.

Always there for you: Your BMW Service Partner is there for helpful, expert support for everything to do with your BMW. Our aim is to make every journey in your BMW as pleasant as possible. A major worldwide network of workshops offers premium service from BMW specialists, innovative diagnostic technologies, and rapid availability of precisely fitting original BMW parts as well as original BMW engine oil.
There are many great reasons to choose services from BMW, but there's one that really stands out: that driving pleasure that sets your BMW apart from the crowd will be yours to enjoy for many years to come with BMW Service.

WHEREVER, WHENEVER: OUR COMPREHENSIVE SERVICE.

Many BMW services can be easily booked and tracked online – so you can use your time for the really important things in life. Stay independent and flexible with online appointments and remote services.
Take advantage of our innovative digital products and services such as online video advice, and get all the relevant information on your smartphone. And if you don't want to stop but have no choice, our BMW Breakdown and Accident Assistance service will help.

BMW SERVICE INCLUSIVE.

Just let go and concentrate only on what really counts: the joy of driving.
You can do precisely that with BMW Service Inclusive because, with just one payment, you're covered for all included service and maintenance work for a duration of your choice, and can drive worry-free and without any hidden costs. Your BMW is always in the best hands – at all participating BMW service partners worldwide.

BMW WARRANTY EXTENSION.

With the BMW dealer warranty, you are protected against unexpected repair costs for 24 months. But you'll have no need to worry even after then due to the option of extending your warranty to up to 5 years.

MY BMW APP.

With the My BMW app, the digital world of BMW is always easily within reach on your smartphone. It offers a wide range of services and functions that make your life easier – before, during and after every journey.
For example, the My BMW App notifies you when your BMW needs a service and offers an easy way to arrange a service appointment with your BMW Service Partner; just one more reason to enjoy the pleasure of driving.

The availability of the services shown and described may vary on a market-specific basis. Your local BMW partner will be happy to advise you on the full range of products and services from BMW Service.

The BMW Group has been finishing at the top end of independent ratings and rankings that assess sustainability for a long time. These successes and increasing challenges in protecting the world we live in encourage us to embed sustainability as a key aspect in our corporate strategy. The development of efficient vehicle concepts, the establishment of eco-friendly production processes and the implementation of sustainable processes at our suppliers is part of our philosophy. Efficiency-enhancing technologies such as BMW EfficientDynamics and consistent electrification have enabled us to cut the CO_2 emissions of our fleet of vehicles in Europe by 50% between 1995 and 2020. In addition, between 2006 and 2020 we have reduced the consumption of water by 31% and the consumption of energy in production by 38%. Our plants worldwide use green electricity only. As of 2021 our plants have even been producing completely carbon neutrally. And, of course, each of our vehicles is designed for easy or economical recycling after its long-running life. Please contact your BMW partner on all matters regarding your end-of-life vehicle. For more information on this issue please visit our website.

Of course, each vehicle is designed for economical recycling after its long-running life. You can find more information regarding your end-of-life vehicle on our website **www.bmw.de/recycling**

© BMW AG, Munich, Germany. Not to be reproduced wholly or in part without prior written permission of BMW AG, Munich.

411 008 012 20 1 2022 CB. Printed in Germany 2022.